NO	DATE	CONTENT	REV BY	CHED BY
1				
2				

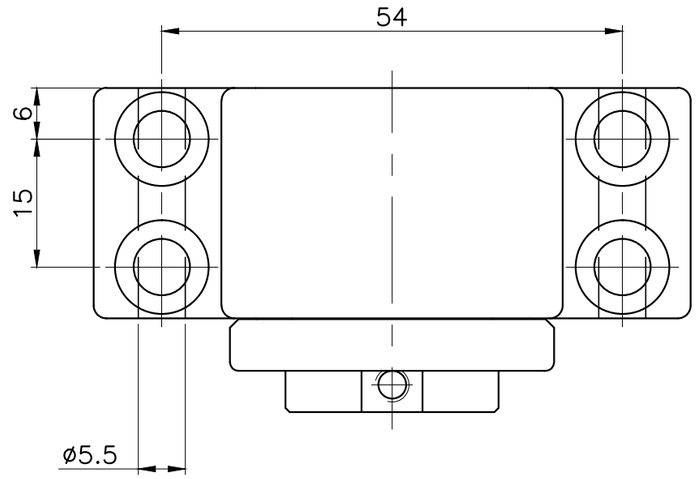

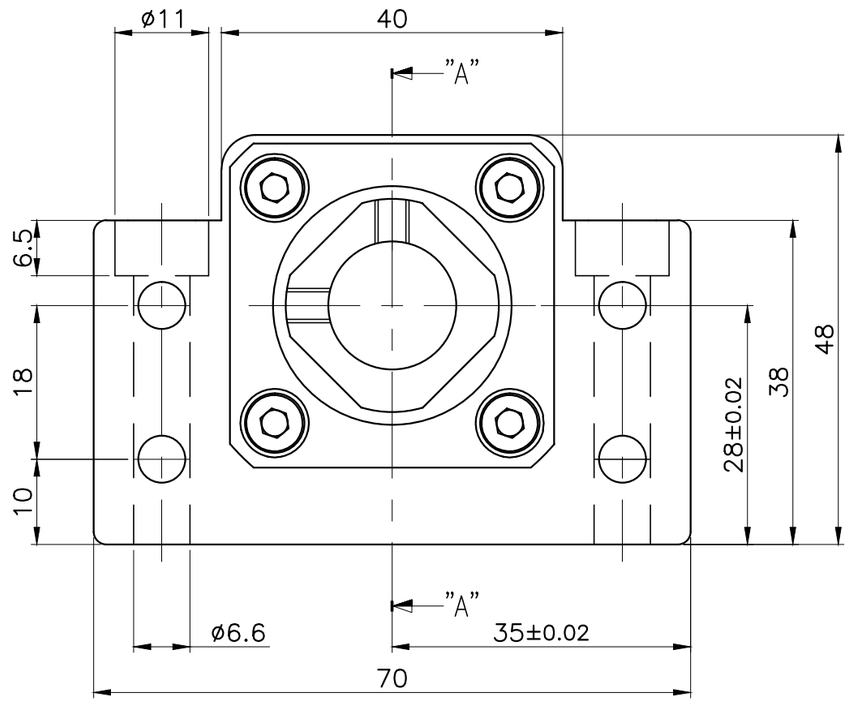

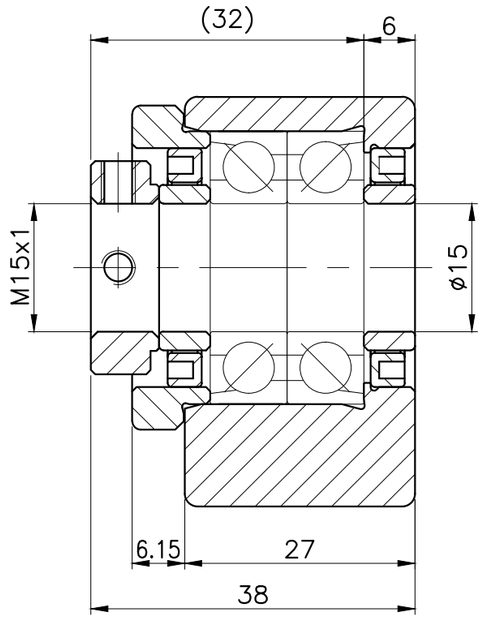

SECTION "A" – "A"

FOR APPROVAL (SBC LINEAR TECHNICAL-SUPPORT)		MODEL NO.	BK15				
SUPPORT UNIT SPEC.		MESSORS.	-		APPLICATION.	-	
Basic Dynamic load rationg	- [kN]	SCALE	N/S	3RD ANGLE	DWG NO.	AP18SU010	
Permissible load	- [kN]	DRAWN BY	DESIGNED BY	CHECKED BY	APP'D BY	DATE	12/ 21/ 2018
Bearing Model No.	7002A	KANG J.H.	-	-	PARK T.S.	SBC Linear Co., Ltd.	

DWG. NO. AP18SU010 REV.

THIS DRAWING CONTAINS PROPRIETARY AND CONFIDENTIAL INFORMATION OF SBC LINEAR AND SHOULD BE MAINTAINED IN STRICT CONFIDENCE. DO NOT COPY OR TRANSFER TO ANY PARTY.

A3 420x297