NO	DATE	CONTENT	REV BY	CHED BY
1				
2				

DWG. NO. AP18SU016 REV.

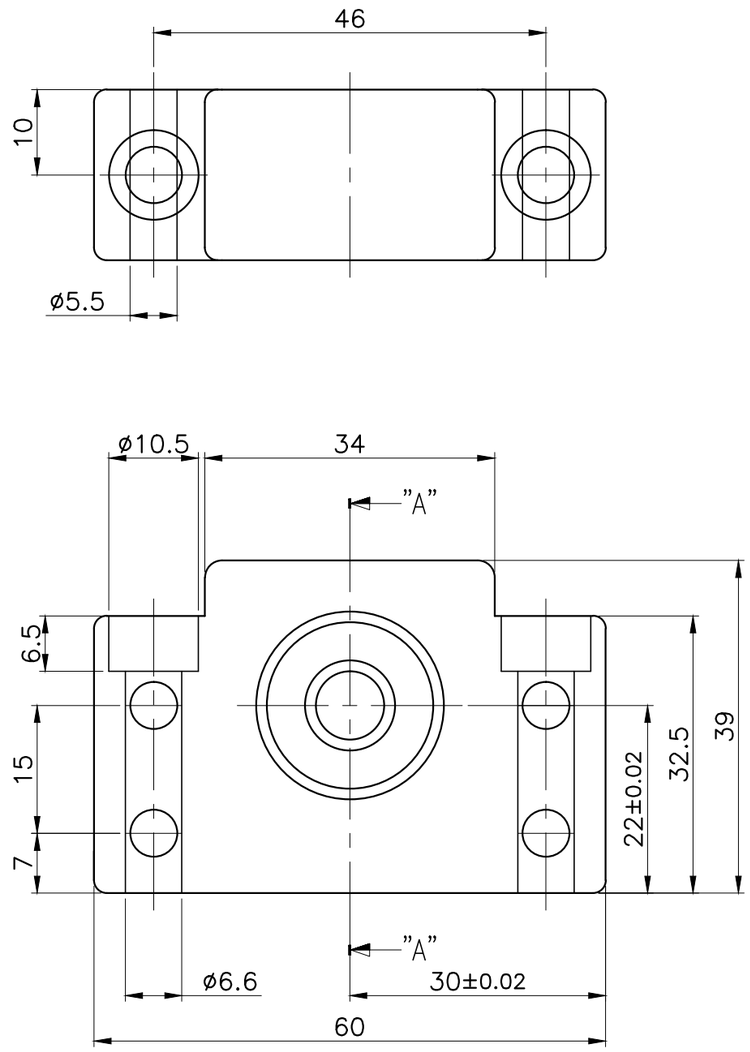

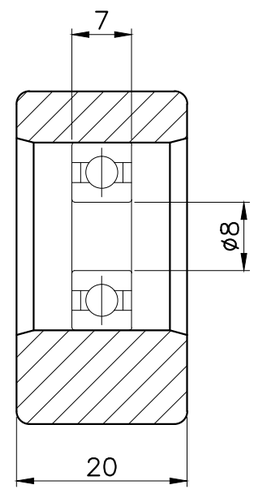

SECTION "A" – "A"

FOR APPROVAL SBC LINEAR TECHNICAL-SUPPORT

SUPPORT UNIT SPEC.		MODEL NO.	BF10				
		MESSORS.	-		APPLICATION.	-	
Basic Dynamic load rationg	- [kN]	SCALE	N/S	3RD ANGLE	DWG NO.	AP18SU016	
Permissible load	- [kN]	DRAWN BY	DESIGNED BY	CHECKED BY	APP'D BY	DATE	12/ 26/ 2018
Bearing Model No.	608ZZ	KANG J.H.	-	-	PARK T.S.	SBC Linear Co., Ltd.	

THIS DRAWING CONTAINS PROPRIETARY AND CONFIDENTIAL INFORMATION OF SBC LINEAR AND SHOULD BE MAINTAINED IN STRICT CONFIDENCE. DO NOT COPY OR TRANSFER TO ANY PARTY.

A3 420x297