NO	DATE	CONTENT	REV BY	CHED BY
1				
2				

DWG. NO. AP18SU035 REV.

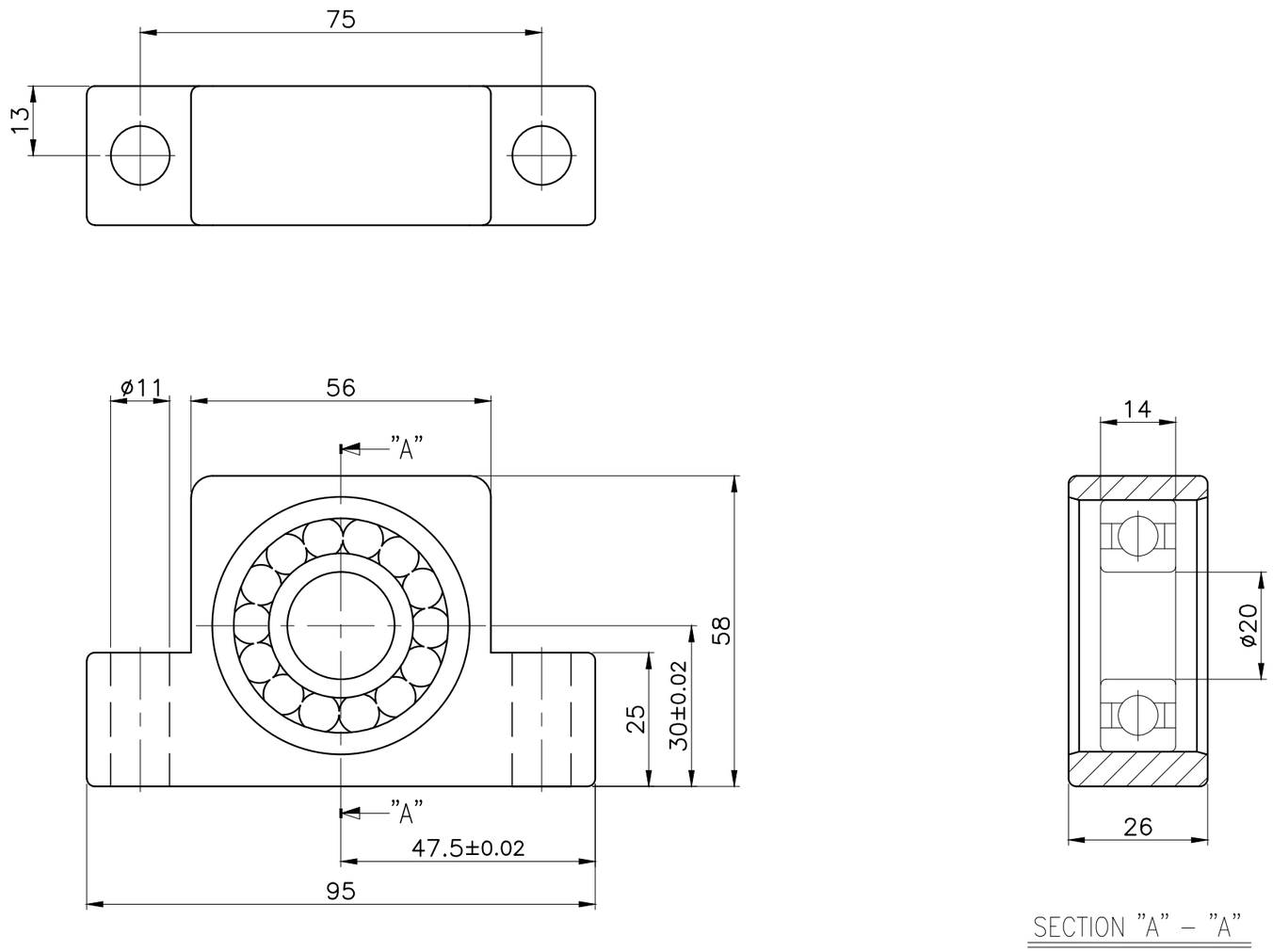

FOR APPROVAL SBC LINEAR TECHNICAL-SUPPORT		MODEL NO.	EF20				
SUPPORT UNIT SPEC.		MESSORS.	-		APPLICATION.	-	
Basic Dynamic load rationg	- [kN]	SCALE	N/S	3RD ANGLE	DWG NO.	AP18SU035	
Permissible load	- [kN]	DRAWN BY	DESIGNED BY	CHECKED BY	APP'D BY	DATE	12/ 21/ 2018
Bearing Model No.	6204ZZ	YU J.H.	-	KANG J.H.	PARK T.S.	Linear Rail System SBC	SBC Linear Co., Ltd.

THIS DRAWING CONTAINS PROPRIETARY AND CONFIDENTIAL INFORMATION OF SBC LINEAR AND SHOULD BE MAINTAINED IN STRICT CONFIDENCE. DO NOT COPY OR TRANSFER TO ANY PARTY.

A3 420x297