LEROY SOMER®

3627 en - 06.2005 / d

PLS

Drip-proof 3-phase induction motors

11 to 900 kW

Technical catalogue

PLS
Drip-proof 3-phase induction motors
11 to 900 kW

The LEROY-SOMER range of drip-proof 3-phase motors

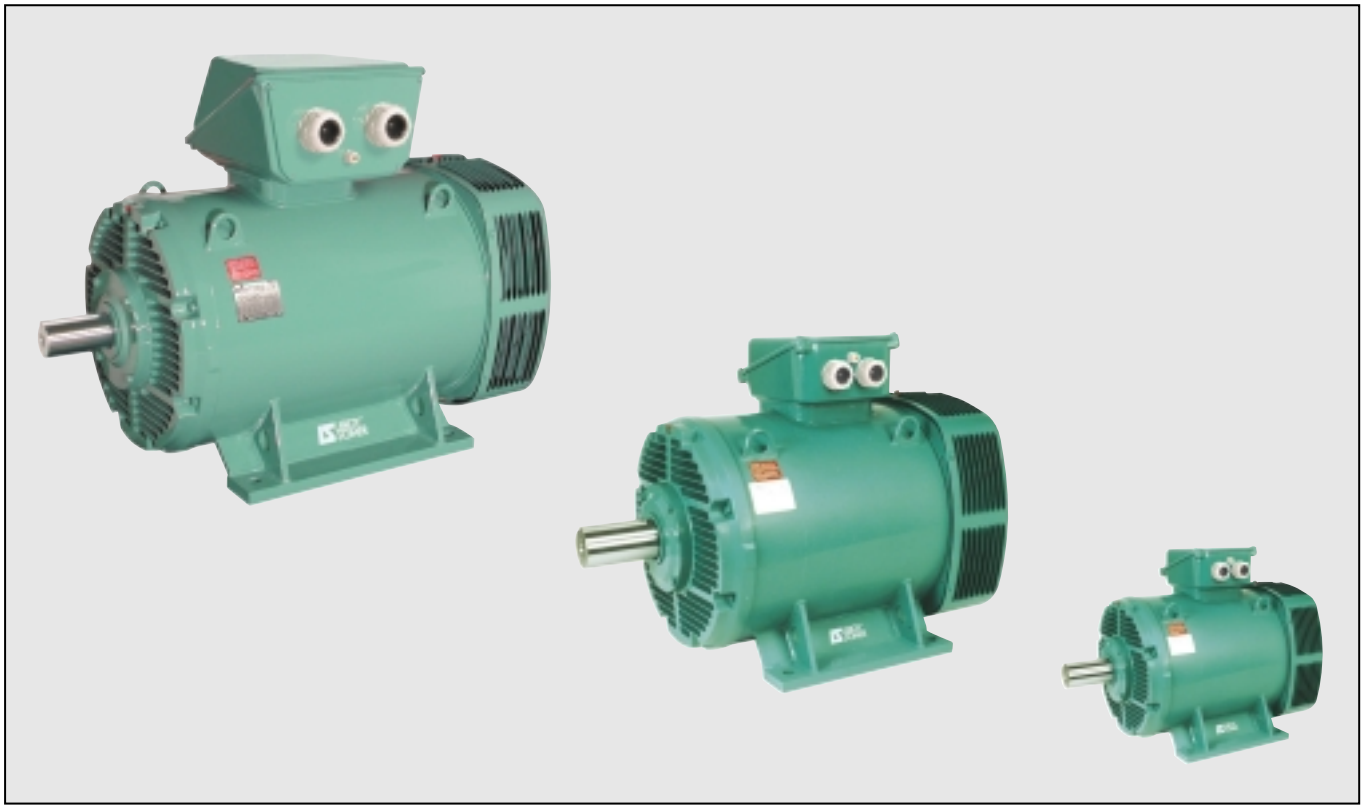

Other LEROY-SOMER motor ranges

3-phase enclosed induction motor

Cast iron motor

VARMECA variable speed motor

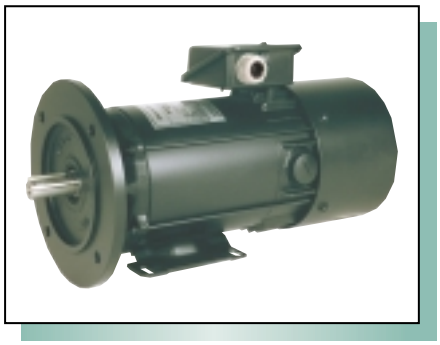

D.C. motor (drip-proof or enclosed)

Motor for variable speed drive systems

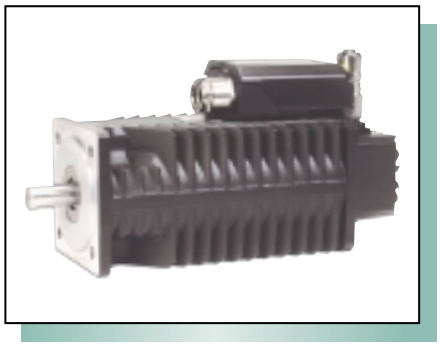

3-phase autosynchronous motor

DELIVERY
WITH GUARANTEED AVAILABILITY

LEROY-SOMER offer their clients the opportunity to fix their own delivery dates, without prior consultation.

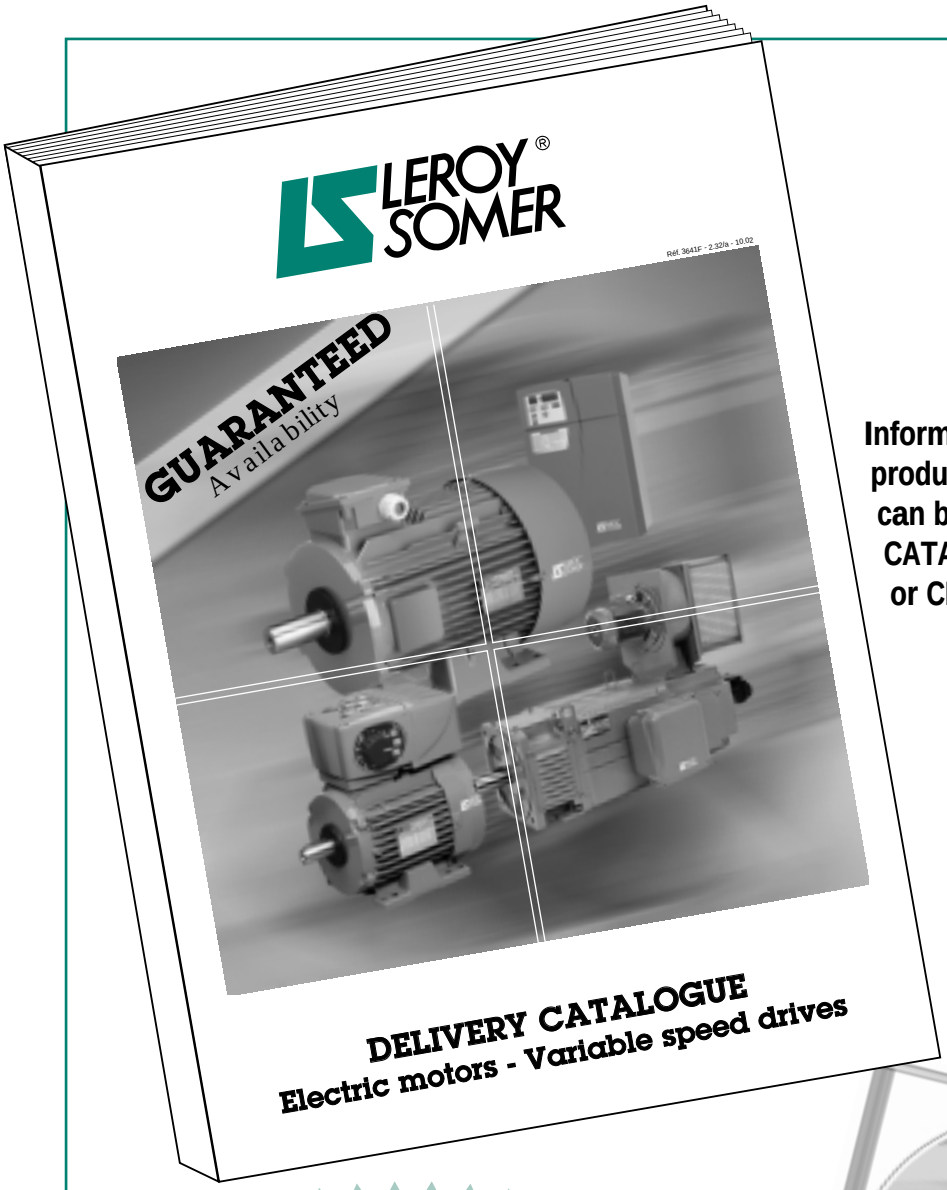

Information regarding products & availability can be found in CATALOGUE ref: 3641 or CD Rom ref: 3709

Guaranteed delivery dates thanks to unique, high performance logistics.

PLS
Drip-proof 3-phase induction motors
11 to 900 kW

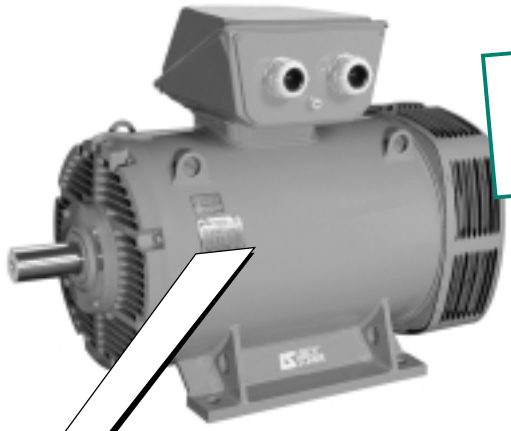

IP 23
Cl. F - ΔT 80 K
MULTI-VOLTAGE

Use the **complete motor designation** as shown below when placing your **order**.

Simply go through the complete designation step by step.

4P 1500 min^{-1}	PLS	180	L	30 kW	IM 1001 IM B3	230 / 400 V	50 Hz	IP 23
No. of poles Speed(s)	Range identification	Frame size IEC 60072-1	Frame type	Rated power	Mounting arrangements IEC 60034-7	Supply voltage	Mains frequency	Degree of Protection IEC 60034-5

For **direct selection** see section : E
Page 37

This document has been translated from the French version which should be used for reference.
LEROY-SOMER reserves the right to modify the design, technical specifications and dimensions of the products shown in this catalogue.
The descriptions cannot in any way be considered contractual.

PLS
Drip-proof 3-phase induction motors
11 to 900 kW

This catalogue gives full information about LEROY-SOMER **PLS induction motors, 11 to 900 kW.**

The selection chart can be used to find exactly the right motor for your application.

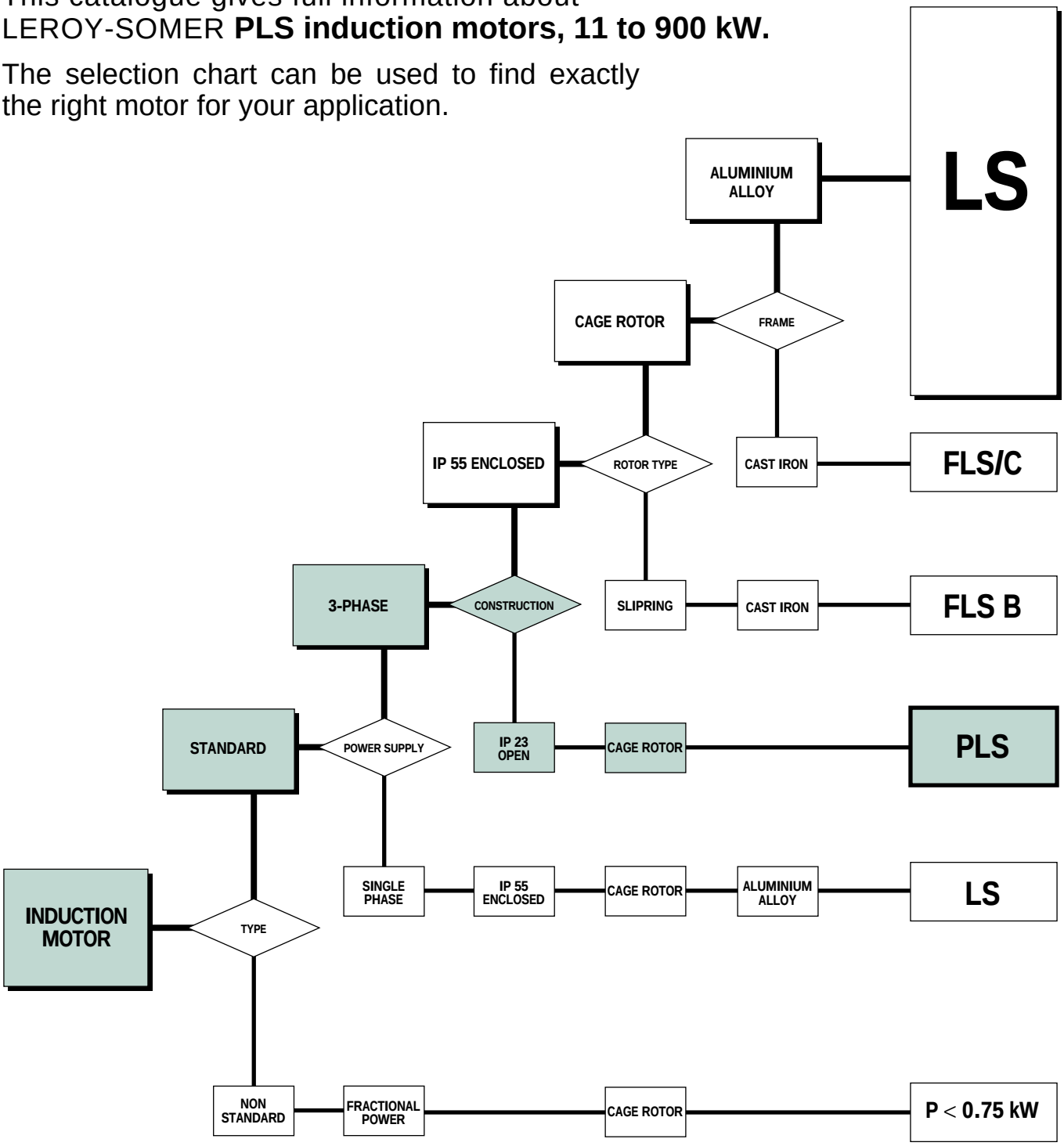

PLS
Drip-proof 3-phase induction motors

Contents

PAGES

A - GENERAL INFORMATION

Quality assurance **7**

Standards and approvals **8**

Tolerance of main parameters **11**

B - ENVIRONMENT

Definition of "Index of Protection" (IP/IK) **12**

C - CONSTRUCTION

Mounting arrangements **13**

Mounting arrangements 13
Mountings and positions (IEC standard 60034-7) 13

Components **14**

Description of standard motors 14
Marine finish 14

Mains connection **15**

Terminal box 15
Table of terminal blocks and type of cable gland for PLS 160 to 400 motors 15
Terminal blocks and type of cable gland for PLS 315 MG to 400 motors 16
Wiring diagrams 16
Earth terminal 16
Flying leads 16

PAGES

Bearings and lubrication **17**

Bearings and bearing life 17
Lubrication and maintenance of bearings 18
Lubrication with grease 18
Regreasing intervals 18
Types of bearing and standard fitting arrangements 19
Bearing assembly diagrams 20
Permissible axial load (in daN) on main shaft extension for standard bearing assembly 21
Permissible radial load on main shaft extension 24
Types and special fitting arrangements for DE roller bearings 28
Bearing assembly diagrams 28
Special fitting arrangement 29

D - OPERATION

Supply voltage **32**

Regulations and standards 32
Effects on motor performance 33
Voltage range 33
Simultaneous variation 33
Phase voltage imbalance 33
Phase current imbalance 33

Power - Torque - Efficiency - Power Factor (Cos φ) **34**

Definitions 34
Rated power in relation to frame size and number of poles 34
Influence of motor load on power factor cos φ and efficiency 34

Noise and vibration **35**

Motor noise levels 35
Vibration levels - balancing 35

Copyright 2005: LEROY-SOMER

PLS
Drip-proof 3-phase induction motors

Contents

PAGES

E - ELECTRICAL CHARACTERISTICS

Selection data **37**

F - DIMENSIONS

Foot-mounted **48**

Foot and flange-mounted **50**

G - OPTIONAL FEATURES

Electrical options **52**

Thermal protection 52
Space heaters 53

Mechanical options - Non-standard flanges **53**

PAGES

H - MAINTENANCE

Identification - Nameplates **54**

Cross-sectional views and parts list **55**

Frame sizes: 160 M/MG/L 55
Frame sizes: 180 LG 56
Frame sizes: 250 57
Frame sizes: 315 58
Frame sizes: 355 59

Index

PAGES

AFNOR 8
Approvals 8

Balancing 35
Bearings 19

Cable gland 15
Cables 16
Connection 16
Cos φ (power factor) 34
Cross-sectional views 55

Dimensions 48
DIN/VDE 8

Earth terminal 16
Efficiency 34
End shields 14

Flange 51

Grease 18
Greasing 18

Heaters 53

Identification 54
IEC 8
index of protection 12

Key 35

Lubrication 18

Mains connection 16
Mounting arrangements 13

Nameplates 54
Noise 35
Noise level 35

Operating positions 13

Parts lists 55
Permissible axial load 21
Permissible radial load 25
Phase imbalance 33
Power 34

PAGES

Quality 7

Roller bearings 28
Rotor 14

Selection data 37
Serial number 54
Special fitting arrangements 28
Speed of rotation 34
Standard bearing arrangements 19
Standards 8
Stator 14
Supply voltage 32

Terminal blocks 15
Terminal box 15
Thermal protection 52
Tolerance 11
Torque 34

UTE 8

Vibration levels 35
Vibrations 35

PLS
Drip-proof 3-phase induction motors
General information

A1 - Quality assurance

Industrial concerns are having to cope with an ever more competitive environment. Productivity depends to a considerable degree on the right investment at the right time.
LEROY-SOMER has the answer, building motors to precise standards of quality.

When carrying out quality checks on a machine's performance, the first step is to **measure the level of customer satisfaction.**

Careful study of this information tells us which points need looking at, improving and monitoring.

From the moment you place your order with our administrative staff until the motor is up and running (after design studies, launch and production activities) we keep you informed and involved.

Our own procedures are constantly under review. All our staff are involved in both operational process analysis and continuous training programmes. These initiatives help them serve you better, and increased skills bring increased motivation.

At LEROY-SOMER, we think it vital for our customers to know the importance we attach to quality.

LEROY-SOMER has entrusted the certification of its expertise to various international organizations.
Certification is granted by independent professional auditors, and recognises the high standards of the **company's quality assurance procedures.**
All activities resulting in the final version of the machine have therefore received official **ISO 9000** accreditation, **Edition 2000**. Products are also approved by official bodies who inspect their technical performance with regard to the various standards.
This is a fundamental requirement for a company of international standing.

A2 - Standards and approvals

A

ORGANIZATION OF STANDARDS AUTHORITIES

International bodies

Worldwide	General Standardization **ISO** International Standards Organization TC Technical committees / SC Sub-committees / WG Working groups	Electronics/Electrotechnical Standardization **IEC** International Electrotechnical Commission TC Technical committees / SC Sub-committees / WG Working groups
European	**CEN** European Committee for Standardization **ECISS** European Committee for Iron and Steel Standards TC Technical committees	**CENELEC** European Committee for Electrotechnical Standardization TC Technical committees / SC Sub-committees / AHG Ad Hoc Groups

Country	Initials	Designation
AUSTRALIA	**SAA**	**S**tandards **A**ssociation of **A**ustralia
BELGIUM	**IBN**	**I**nstitut **B**elge de **N**ormalisation
CIS (ex-USSR)	**GOST**	**Go**sudarstvenne Komitet **St**andartov
DENMARK	**DS**	**D**ansk **S**tandardisieringsraad
FINLAND	**SFS**	**S**uomen **S**tandardisoimisliitto
FRANCE	**AFNOR including UTE**	**A**ssociation **F**rançaise de **N**ormalisation including: **U**nion **T**echnique de l'**É**lectricité
GERMANY	**DIN/VDE**	**V**erband **D**eutscher **E**lektrotechniker
GREAT BRITAIN	**BSI**	**B**ritish **S**tandards **I**nstitution
ITALY	**CEI**	**C**omitato **E**lecttrotechnico **I**taliano
JAPAN	**JIS**	**J**apanese **I**ndustrial **S**tandard
NETHERLANDS	**NNI**	**N**ederlands **N**ormalisatie - **I**nstituut
NORWAY	**NFS**	**N**orges **S**tandardisieringsforbund
SAUDI ARABIA	**SASO**	**S**audi **A**rabian **S**tandards **O**rganization
SPAIN	**UNE**	**U**na **N**orma **E**spañola
SWEDEN	**SIS**	**S**tandardisieringskommissionen **I** **S**verige
SWITZERLAND	**SEV or ASE**	**S**chweizerischer **E**lektrotechnischer **V**erein
UNITED STATES	**ANSI including NEMA**	**A**merican **N**ational **S**tandards **I**nstitute including: **N**ational **E**lectrical **Ma**nufacturers

A2 - Standards and approvals

Approvals

Certain countries recommend or insist on approval from national organizations.
Approved products must carry the recognized mark on their identification plates.

Country	Initials	Organization
USA	FU	Underwriters Laboratories
CANADA	CSA	Canadian Standards Association
etc.		

Approvals for LEROY-SOMER motors:

Country	Initials	Certification No.	Application
CANADA	CSA	LR 57 008	Standard
USA	FU	E 68554 SA 6704	Impregnation systems Stator/rotor assemblies for sealed units
SAUDI ARABIA	SASO		Standard range

For specific approved products (marine, etc), see the relevant documents.

International and national standard equivalents

International reference standards		National standards				
IEC	Title (summary)	FRANCE	GERMANY	U.K.	ITALY	SWITZERLAND
60034-1	Ratings and operating characteristics	NFEN 60034-1 NFC 51-120 NFC 51-200	DIN/VDE O530	BS 4999	CEI 2.3.VI.	SEV ASE 3009
60034-2	Determination of losses and efficiency	NFEN 60034-2	DIN/EN 60034-2	BS 4999-102		
60034-5	Classification of degrees of protection	NFEN 60034-5	DIN/EN 60034-5	BS EN 60034-5	UNEL B 1781	
60034-6	Cooling methods	NFEN 60034-6	DIN/EN 60034-6	BS EN 60034-6		
60034-7	Mounting arrangements and assembly layouts	NFEN 60034-7	DIN/EN 60034-7	BS EN 60034-7		
60034-8	Terminal markings and direction of rotation	NFC 51 118	DIN/VDE 0530 Teil 8	BS 4999-108		
60034-9	Noise limits	NFEN 60034-9	DIN/EN 60034-9	BS EN 60034-9		
60034-12	Starting characteristics for single-speed motors powered from the mains ≤ 660 V	NFEN 60034-12	DIN/EN 60034-12	BS EN 60034-12		SEV ASE 3009-12
60034-14	Mechanical vibration in machines of frame size > 56 mm	NFEN 60034-14	DIN/EN 60034-14	BS EN 60034-14		
60072-1	Dimensions and output powers for machines of between 56 and 400 frame and flanges of between 55 and 1080	NFC 51,104 NFC 51 105	DIN 748 (~) DIN 42672 DIN 42673 DIN 42631 DIN 42676 DIN 42677	BS 4999		
60085	Evaluation and thermal classification of electrical insulation	NFC 26206	DIN/EN 60085	BS 2757		SEV ASE 3584

Note: DIN 748 tolerances do not conform to IEC 60072-1.

A2 - Standards and approvals

A

PLS motors comply with the standards quoted in this catalogue

List of standards quoted in this document

Reference		Date	International standards
IEC 60034-1	EN 60034-1	1999	Electrical rotating machines: ratings and operating characteristics.
IEC 60034-5	EN 60034-5	2000	Electrical rotating machines: classification of degrees of protection provided by casings of rotating machines.
IEC 60034-6	EN 60034-6	1993	Electrical rotating machines (except traction): cooling methods.
IEC 60034-7	EN 60034-7	2000	Electrical rotating machines (except traction): symbols for mounting positions and assembly layouts.
IEC 60034-8		2001	Electrical rotating machines: terminal markings and direction of rotation.
IEC 60034-9	EN 60034-9	1997	Electrical rotating machines: noise limits.
IEC 60034-12	EN 60034-12	1999	Starting characteristics for single-speed 3-phase cage induction motors for supply voltages less than or equal to 660V.
IEC 60034-14	EN 60034-14	1996	Electrical rotating machines: mechanical vibrations of certain machines with a frame size above or equal to 56 mm. Measurement, evaluation and limits of vibrational intensity.
IEC 60038		1999	IEC standard voltages.
IEC 60072-1		1991	Dimensions and power series for electrical rotating machines: designation of casings between 56 and 400 and flanges between 55 and 1080.
IEC 60085		1984	Evaluation and thermal classification of electrical insulation.
IEC 60721-2-1		1987	Classification of natural environment conditions. Temperature and humidity.
IEC 60892		1987	Effects of an imbalance in the voltage system on the characteristics of three-phase squirrel-cage induction motors.
IEC 61000-2-10/11 and 2-2		1999	Electromagnetic compatibility (EMC): environment.
IEC guide 106		1989	Guidelines on the specification of environmental conditions for the determination of operating characteristics of equipment.
ISO 281		2000	Bearings - Basic dynamic loadings and nominal bearing life.
ISO 1680	EN 21680	1999	Acoustics - Test code for measuring airborne noise emitted by electrical rotating machines: a method for establishing an expert opinion for free field conditions over a reflective surface.
ISO 8821		1999	Mechanical vibration - Balancing. Conventions on shaft keys and related parts.
	EN 50102	1998	Degree of protection provided by the electrical housing against external mechanical impacts.

A3 - Tolerance on main performance parameters

Tolerances for electromechanical characteristics

IEC 60034-1 specifies standard tolerances for electromechanical characteristics.

Parameters	Tolerances
Efficiency { machines P ≤ 50 kW machines P > 50 kW	**– 15% (1 – η)** **– 10% (1 – η)**
Cos φ	**– 1/6 (1 – cos φ)** **(min 0.02 - max 0.07)**
Slip { machines P < 1 kW machines P ≥ 1 kW	**± 30%** **± 20%**
Locked rotor torque	**– 15%, + 25% of rated torque**
Starting current	**+ 20%**
Run-up torque	**-15% of rated torque**
Breakdown torque	**-10% of rated torque** **> 1.5 M_N**
Moment of inertia	**± 10%**
Noise	**+ 3 dB (A)**
Vibration	**+ 10% of the guaranteed class**

Note: IEC 60034-1 does not specify tolerances for current
- the tolerance is ± 10% in NEMA-MG1

Tolerances and adjustments

The standard tolerances shown below are applicable to the drawing dimensions given in our catalogues. They comply fully with the requirements of IEC standard 60072-1.

Characteristics	Tolerances
Frame size H ≤ 250 ≥ 280 Diameter ∅ of shaft extension: - 32 to 48 mm - 55 mm and over	**0, — 0.5 mm** **0, — 1 mm** **k6** **m6**
Diameter N of flange spigot	**j6 up to FF 500,** **js6 for FF 600 and over**
Key width	**h9**
Width of drive shaft keyway (normal keying)	**N9**
Key depth - square section - rectangular section	 **h9** **h11**
① ***Eccentricity of shaft in flanged motors*** (standard class) - diameter > 30 up to 50 mm - diameter > 50 up to 80 mm - diameter > 80 up to 120 mm	 **0.050 mm** **0.060 mm** **0.070 mm**
② ***Concentricity of spigot diameter*** and ③ ***perpendicularity of mating surface of flange in relation to shaft*** (standard class) Flange (FF): - FF 300 to FF 500 - FF 600 to FF 740 - FF 940 to FF 1080	 **0.125 mm** **0.16 mm** **0.20 mm**

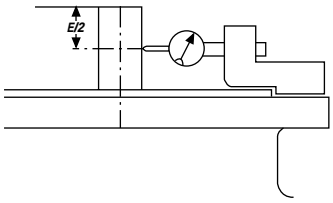

① ***Eccentricity of shaft in flanged motors***

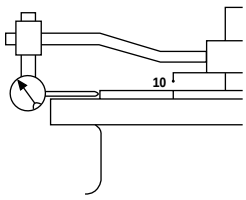

② ***Concentricity of spigot diameter***

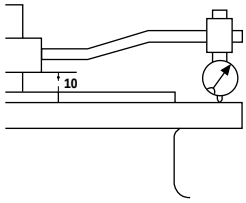

③ ***Perpendicularity of mating surface of flange in relation to shaft***

B1 - Definition of “Index of Protection” (IP/IK)

PLS motors are IP 23 IK 08 as standard

Indices of protection of electrical equipment enclosures

First number: protection against solid objects			Second number: protection against liquids			Third number: mechanical protection		
IP	**Tests**	**Definition**	**IP**	**Tests**	**Definition**	**IK**	**Tests**	**Definition**
0		No protection	0		No protection	00		No protection
1	∅ 50 mm	Protected against solid objects of over 50 mm (eg : accidental hand contact)	1		Protected against vertically dripping water (condensation)	01	150 g, 10 cm	Impact energy: 0.15 J
2	∅ 12 mm	Protected against solid objects of over 12 mm (eg : finger)	2	15°	Protected against water dripping up to 15° from the vertical	02	200 g, 10 cm	Impact energy: 0.20 J
3	∅ 2.5 mm	Protected against solid objects of over 2.5 mm (eg : tools, wire)	3	60°	Protected against rain falling at up to 60° from the vertical	03	250 g, 15 cm	Impact energy: 0.37 J
4	∅ 1 mm	Protected against solid objects of over 1 mm (eg : small tools, thin wire)	4		Protected against water splashes from all directions	04	250 g, 20 cm	Impact energy: 0.50 J
5		Protected against dust (no deposits of harmful material)	5		Protected against jets of water from all directions	05	350 g, 20 cm	Impact energy: 0.70 J
6		Protected against entry of dust	6		Protected against jets of water comparable to heavy seas	06	250 g, 40 cm	Impact energy: 1 J
			7	0,15 m, 1 m	Protected against the effects of immersion to depths of between 0.15 and 1 m	07	0.5 kg, 40 cm	Impact energy: 2 J
			8 . . m	..m	Protected against the effects of prolonged immersion under pressure	08	1.25 kg, 40 cm	Impact energy: 5 J
						09	2.5 kg, 40 cm	Impact energy: 10 J
						10	5 kg, 40 cm	Impact energy: 20 J

Example:

IP 23 machine

IP : Index of protection

2 : Protected against solid objects of over 12 mm (example: finger)

3 : Protected against rain falling at up to 60° from the vertical

C1 - Mounting arrangements

C1.1 - MOUNTING ARRANGEMENTS

IM 1001 (IM B3)

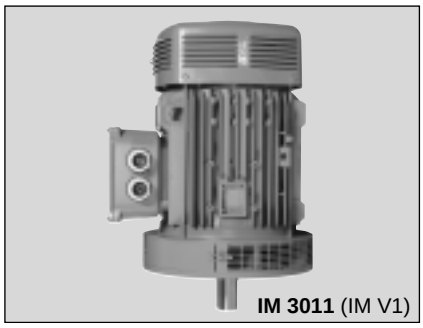

IM 3011 (IM V1)

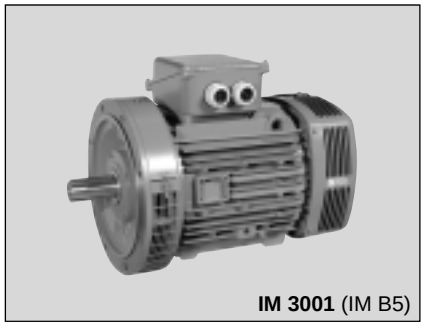

IM 3001 (IM B5)

The various mounting arrangements for machines are defined in IEC 60034-7. Below is an extract from the standard which shows equivalent terms in current use.

Code formulation

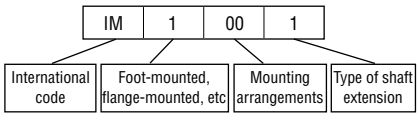

Code I	Code II
IM B 3	IM 1001
IM V 5	IM 1011
IM V 6	IM 1031
IM B 6	IM 1051
IM B 7	IM 1061
IM B 8	IM 1071
IM B 35	IM 2001
IM V 15	IM 2011
IM V 36	IM 2031
IM B 5	IM 3001
IM V 1	IM 3011
IM V 3	IM 3031

Codes I and II are interchangeable. It should however be noted that the above code list is not exhaustive and you should therefore refer to IEC 60034-7 for other designations. Below you will find the most common mounting arrangements with line drawings and an explanation of the standard symbols used.

C

C1.2 - MOUNTINGS AND POSITIONS (IEC standard 60034-7)

Foot-mounted motors

• all frame sizes

IM 1001 (IM B3)
- Horizontal shaft
- Feet on floor

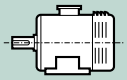

IM 1071 (IM B8)
- Horizontal shaft
- Feet on top

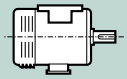

IM 1051 (IM B6)
- Horizontal shaft
- Wall-mounted with feet on left hand side when viewed from drive end

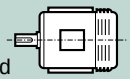

IM 1011 (IM V5)
- Vertical shaft facing down
- Feet on wall

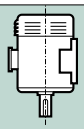

IM 1061 (IM B7)
- Horizontal shaft
- Wall-mounted with feet on right hand side when viewed from drive end

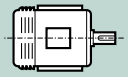

IM 1031 (IM V6)
- Vertical shaft facing up
- Feet on wall

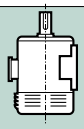

(FF) flange-mounted motors

• all frame sizes
(except IM 3001, which is limited to frame size 225)

IM 3001 (IM B5)
- Horizontal shaft

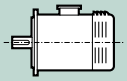

IM 2001 (IM B35)
- Horizontal shaft
- Feet on floor

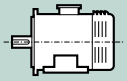

IM 3011 (IM V1)
- Vertical shaft facing down

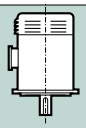

IM 2011 (IM V15)
- Vertical shaft facing down
- Feet on wall

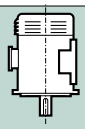

IM 3031 (IM V3)
- Vertical shaft facing up

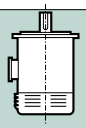

IM 2031 (IM V36)
- Vertical shaft facing up
- Feet on wall

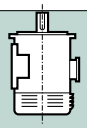

PLS
Drip-proof 3-phase induction motors
Construction

C2 - Components

C2.1 - DESCRIPTION OF STANDARD MOTORS

Component	Materials	Remarks
1 Frame	Aluminium alloy or steel	- with integral feet or without feet - gravity die-cast for frame size ≤ 250 • in steel for frame sizes ≥ 280 • 4 or 6 fixing holes for housings with feet • lifting rings
2 Stator	Insulated low-carbon magnetic steel laminations Electroplated copper	- low carbon content guarantees long-term lamination pack stability - welded packs - semi-enclosed slots - class F insulation
3 Rotor	Insulated low-carbon magnetic steel laminations Aluminium or copper	- inclined cage bars - rotor cage pressure die-cast in aluminium for frame size ≤ 315 soldered for frame size ≥ 355 - rotor cage shrink-fitted to shaft for frame sizes ≤ 315 keyed for frame size ≥ 355 - dynamically balanced rotor, class N, 1/2 key
4 Shaft	Steel	
5 End shields	Cast iron or steel	
6 Bearings and lubrication		Standard mounting: - ball bearings C3 play - sealed and “greased for life” for frame sizes 160 M, L, 180 M and L - semi-protected or open types from frame size 180 LG upwards - regreasable from frame size 225 upwards - bearings preloaded at non drive end
7 Labyrinth seal Lipseals	Plastic or steel Synthetic rubber	- lipseal at drive end for all flange-mounted motors - lipseal or labyrinth seal for foot-mounted motors
8 Fan	Composite material aluminium alloy or steel	- bidirectional fan in motors with 2 poles (P ≤ 250 kW), 4, 6 and 8 poles - unidirectional fan (direction of rotation to be specified at time of ordering) in motors with 2 poles,
9 Fan cover	Pressed steel	- fitted, on request, with a drip cover for operation in vertical position, shaft end facing up
10 Terminal box	Composite material aluminium alloy or steel	- can be turned in 4 directions for frame size ≤ 225, on opposite side from the feet - fitted as standard with a terminal block with 6 steel terminals - terminal box comes complete with cable gland for frame size ≤ 315 L, for motors 315 MG and larger sizes, terminal box comes complete with a cable gland support plate, undrilled and removable, without cable gland - 1 earth terminal in each terminal box

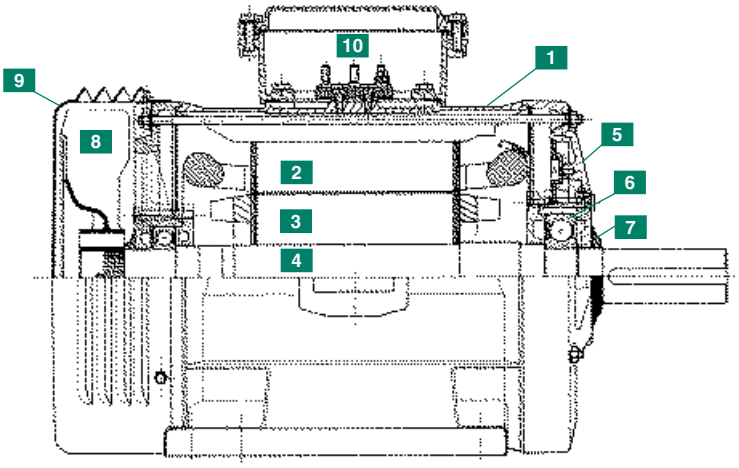

C2.2 - MARINE FINISH

The electrical characteristics and dimensions of these motors can be found in technical catalogue ref. 2400.

PLS
Drip-proof 3-phase induction motors
Construction

C3 - Mains connection

C3.1 - TERMINAL BOX

Placed as standard on the top of the motor near the drive end, the terminal box is made up of IP 55 components and is fitted with a cable gland in accordance with the table below.
The standard position of the cable gland is on the right, seen from the drive end but, owing to the symmetrical construction of the box, it can usually be placed in any of the 4 directions, except for:
- position **2** for flange-mounted motors.
- positions **2** and **4** for PLS 315 MG/LG/VLG/VLGU, PLS 355 and PLS 400 motors.

If required, the terminal box may be fitted in a different position (on the left or right as seen from the drive end).

▼ ***Positions of the terminal box in relation to the drive end (motor in IM 1001 position)***

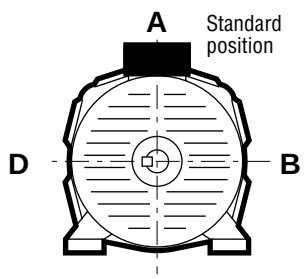

▼ ***Positions of the cable gland in relation to the drive end***

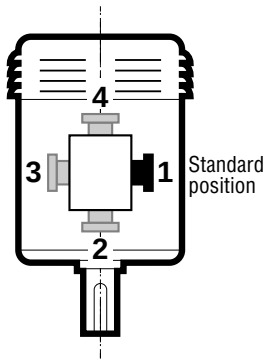

C3.1.1 - Table of terminal blocks and type of cable gland for PLS 160 to 400 motors

Power kW	2 Poles				4 and 6 Poles			
	230/400 V		400 V Δ		230/400 V		400 V Δ	
11	M6	2 x ISO 25	M6	2 x ISO 25	M6	2 x ISO 25	M6	2 x ISO 25
15	M6	2 x ISO 25	M6	2 x ISO 25	M6	2 x ISO 25	M6	2 x ISO 25
18.5	M6	2 x ISO 25	M6	2 x ISO 25	M8	2 x ISO 32	M6	2 x ISO 25
22	M8	2 x ISO 32	M6	2 x ISO 25	M8	2 x ISO 32	M6	2 x ISO 25
30	M8	2 x ISO 32	M6	2 x ISO 25	M8	2 x ISO 32	M6	2 x ISO 25
37	M8	2 x ISO 32	M8	2 x ISO 32	M10	2 x ISO 40	M8	2 x ISO 32
45	M10	2 x ISO 40	M8	2 x ISO 32	M10	2 x ISO 40	M8	2 x ISO 32
55	M10	2 x ISO 40	M8	2 x ISO 32	M10	2 x ISO 40	M8	2 x ISO 32
75	M12	2 x ISO 50	M10	2 x ISO 40	M12	2 x ISO 50	M10	2 x ISO 40
90	M12	2 x ISO 50	M10	2 x ISO 40	M12	2 x ISO 50	M10	2 x ISO 40
110	M16	2 x ISO 63	M12	2 x ISO 50	M16	2 x ISO 63	M12	2 x ISO 50
132	M16	2 x ISO 63	M12	2 x ISO 50	M16	2 x ISO 63	M12	2 x ISO 50
160	M16	2 x ISO 63	M12	2 x ISO 50	M16	2 x ISO 63	M12	2 x ISO 50
200	M16	2 x ISO 63	M16	2 x ISO 63	M16	2 x ISO 63	M16	2 x ISO 63
250	M16	2 x ISO 63	M16	2 x ISO 63	M16	2 x ISO 63	M16	2 x ISO 63
280	M16	*	M16	*	M16	*	M16	*
315	M16	*	M16	*	M16	*	M16	*

* These motors are supplied with a removable undrilled cable gland support plate.

Frame size	2 Poles				4, 6 and 8 Poles			
	230/400 V		400 V Δ		230/400 V		400 V Δ	
PLS 315 MG/LG	M12	**	M12	**	M12	**	M12	**
PLS 315 VLG/VLGU	M12	**	M12	**	M12	**	M12	**
PLS 355/400	M14	**	M14	**	M14	**	M14	**

** From the PLS 315 MG upwards, the cable gland mounting plates are supplied without cable glands, nozzles or drill holes.

Tightening torque for the nuts on the terminal blocks ▶

Terminal	M4	M5	M6	M8	M10	M12	M14	M16
Torque N.m	2	3.2	5	10	20	35	50	65

Tightening capacity of cable glands

Type of cable gland	Tightening capacity	
	min. cable Ø (mm)	max. cable Ø (mm)
ISO 16	5	10
ISO 20	9.5	15
ISO 25	13	19
ISO 32	15	25
ISO 40	21	32
ISO 50	26	38
ISO 63	31	44

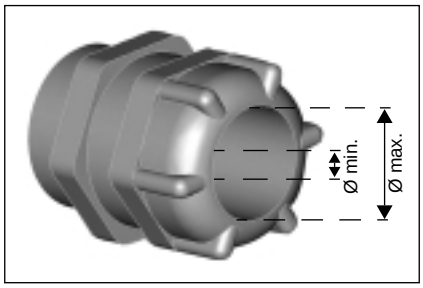

Standard cable gland material = plastic (brass on request).
On request, the terminal boxes can be supplied with drill holes, without cable glands.

C3 - Mains connection

C3.1.2 - Terminal blocks and type of cable gland for PLS 315 MG to 400 motors

Whatever the number of poles, cable glands are optional because of the large number of power cable combinations. PLS 315 MG to 400 motors with 2, 4, 6 and 8 poles are supplied with a removable and undrilled cable gland mounting plate.
If you wish to receive a pre-drilled plate fitted with cable glands, your order must specify the number of cables, their diameter and the type of cable gland required.
PLS 315 MG/LG/VLG/VLGU motors are supplied with M 12 terminal blocks.
Motors of frame size 355 and 400 are supplied with M14 insulators.

C3.2 - WIRING DIAGRAMS

All standard motors are supplied with a wiring diagram in the terminal box.
The diagram normally used is shown below.

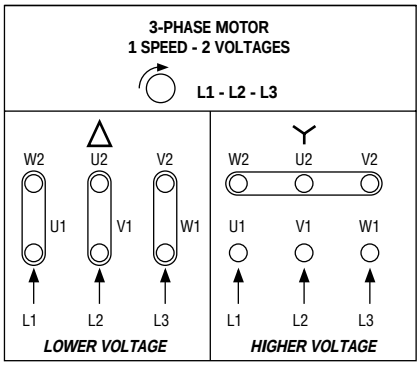

C3.3 - EARTH TERMINAL

This is situated inside the terminal box.
Consisting of a threaded stud with a hexagonal nut, it is used to connect cables with cross-sections at least as large as the cross-section of the phase conductors.

It is indicated by the sign ⏚ in the terminal box moulding.
On request, a second earth terminal can be fitted on the motor casing.

C3.4 - FLYING LEADS

Motors can be supplied with flying leads or multicore cables (ask for estimate). Please state cable characteristics (type and supplier, cross-section, length, number of conductors), connection method (on stator coil end turns, or on a separate panel), and the cable gland position required.

C4 - Bearings and lubrication

C4.1 - BEARINGS AND BEARING LIFE

Definitions

Load ratings

- Basic static load C_o:

This is the load for which permanent deformation at point of contact between a bearing race and the ball (or roller) with the heaviest load reaches 0.01% of the diameter of the ball (or roller).

- Basic dynamic load C:

This is the load (constant in intensity and direction) for which the nominal lifetime of the bearing will reach 1 million revolutions.

The static load rating C_o and dynamic load rating C are obtained for each bearing by following the method in ISO 281.

Lifetime

The lifetime of a bearing is the number of revolutions (or number of operating hours at a constant speed) that the bearing can accomplish before the first signs of fatigue (spalling) begin to appear on a ring, ball or roller.

- Nominal lifetime L10h

According to the ISO recommendations, the nominal lifetime is the length of time completed or exceeded by 90% of apparently identical bearings operating under the conditions specified by the manufacturer.

Note: The majority of bearings last much longer than the nominal lifetime; the average lifetime achieved or exceeded by 50% of bearings is around 5 times longer than the nominal lifetime.

Determination of nominal lifetime

Constant load and speed of rotation

The nominal lifetime of a bearing expressed in operating hours L_{10h}, the basic dynamic load C expressed in daN and the applied loads (radial load F_r and axial load F_a) are related by the following equation:

$$L_{10h} = \frac{1000000}{60 \cdot N} \cdot \left(\frac{C}{P}\right)^p$$

where N = speed of rotation (min-1)

P ($P = X\ F_r + Y\ F_a$): equivalent dynamic load (F_r, F_a, P in daN)

p: an index which depends on the type of contact between the races and balls (or rollers)

p = 3 for ball bearings

p = 10/3 for roller bearings

The formulae that give equivalent dynamic load (values of factors X and Y) for different types of bearing may be obtained from their respective manufacturers.

Variable load and speed of rotation

For bearings with periodically variable load and speed, the nominal lifetime is established using the equation:

$$L_{10h} = \frac{1000000}{60 \cdot N_m} \cdot \left(\frac{C}{P_m}\right)^p$$

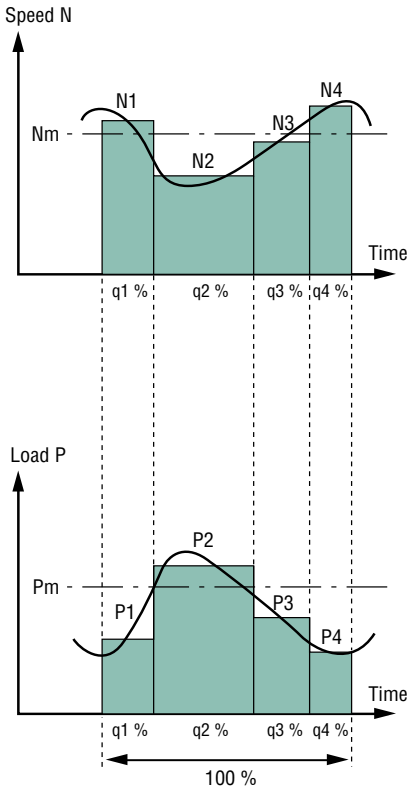

N_m: average speed of rotation

$$N_m = N_1 \cdot \frac{q_1}{100} + N_2 \cdot \frac{q_2}{100} + \ldots (\mathrm{min}^{-1})$$

P_m : average equivalent dynamic load

$$P_m = \sqrt[1/p]{P_1^{1/p} \cdot \left(\frac{N_1}{N_m}\right) \cdot \frac{q_1}{100} + P_2^{1/p} \cdot \left(\frac{N_2}{N_m}\right) \cdot \frac{q_2}{100} + \ldots (\mathrm{daN})}$$

with q_1, q_2, etc as a %

Nominal lifetime L_{10h} is applicable to bearings made of bearing steel and normal operating conditions (lubricating film present, no contamination, correctly fitted, etc).

Situations and data differing from these conditions will lead to either a reduction or an increase in lifetime compared to the nominal lifetime.

Corrected nominal lifetime

If the ISO recommendations (DIN ISO 281) are used, improvements to bearing steel, manufacturing processes and the effects of operating conditions may be integrated in the nominal lifetime calculation.

The theoretical pre-fatigue lifetime L_{nah} is thus calculated using the formula:

$L_{nah} = a_1\ a_2\ a_3\ L_{10h}$

with:

a_1: failure probability factor

a_2: factor for the characteristics and tempering of the steel

a_3: factor for the operating conditions (lubricant quality, temperature, speed of rotation, etc)

Under normal operating conditions for PLS motors, the corrected nominal lifetime, calculated with a failure probability factor a1 = 1 (L_{10ah}), is longer than the nominal lifetime L_{10h}.

C

C4 - Bearings and lubrication

C4.2 - LUBRICATION AND MAINTENANCE OF BEARINGS

Role of the lubricant

The principal role of the lubricant is to avoid direct contact between the metal parts in motion: balls or rollers, slip-rings, cages, etc. It also protects the bearing against wear and corrosion.
The quantity of lubricant needed by a bearing is normally quite small. There should be enough to provide good lubrication without undesirable overheating. As well as lubrication itself and the operating temperature, the amount of lubricant should be judged by considerations such as sealing and heat dissipation.
The lubricating power of a grease or an oil lessens with time owing to mechanical constraints and straightforward ageing. Used or contaminated lubricants should therefore be replaced or topped up with new lubricant at regular intervals.
Bearings can be lubricated with grease, oil or, in certain cases, with a solid lubricant.

C4.2.1 - Lubrication with grease

A lubricating grease can be defined as a product of semi-fluid consistency obtained by the dispersion of a thickening agent in a lubricating fluid and which may contain several additives to give it particular properties.

Composition of a grease
Base oil: 85 to 97%
Thickener: 3 to 15%
Additives: 0 to 12%

The base oil lubricates

The oil making up the grease **is of prime importance.** It is the oil that lubricates the moving parts by coating them with a protective film which prevents direct contact. The thickness of the lubricating film is directly linked to the viscosity of the oil, and the viscosity itself depends on temperature. The two main types used to make grease are mineral oils and synthetic oils. Mineral oils are suitable for normal applications in a range of temperatures from -30° to +150°C. Synthetic oils have the advantage of being effective in severe conditions (extreme variations of temperature, harsh chemical environments, etc).

The thickener gives the grease consistency

The more thickener a grease contains, the 'harder' it will be. Grease consistency varies with the temperature. In falling temperatures, the grease hardens progressively, and the opposite happens when temperatures rise.
The consistency of a grease can be quantified using the NLGI (National Lubricating Grease Institute) classification. There are 9 NLGI grades, from 000 for the softest greases up to 6 for the hardest. Consistency is expressed by the depth to which a cone may be driven into a grease maintained at 25°C.

If we only consider the chemical nature of the thickener, lubricating greases fall into three major categories:

- **conventional greases with a metallic soap base** (calcium, sodium, aluminium, lithium). Lithium soaps have several advantages over other metallic soaps: a high melting point (180° to 200°), good mechanical stability and good water resistant properties.
- **greases with a complex soap base.** The main advantage of this type of soap is a very high melting point (over 250°C).
- **soapless greases.** The thickener is an inorganic compound, such as clay. Their main property is the absence of a melting point, which makes them practically non-liquefying.

Additives improve some properties of greases

Additives fall into two types, depending on whether or not they are soluble in the base oil.

The most common insoluble additives - graphite, molybdenum disulphide, talc, mica, etc, improve the friction characteristics between metal surfaces. They are therefore used in applications where heavy pressure occurs.

The soluble additives are the same as those used in lubricating oils: antioxidants, anti-rust agents, etc.

C4.2.2 - Regreasing intervals

The chart opposite shows the regreasing intervals, depending on the type of motor, for standard bearing assemblies, operating at an ambient temperature of 25°C on a horizontal shaft machine.
Motors operating at an ambient 40°C need more frequent lubrication. The intervals between greasing will be about half of those shown in the table.

The table opposite is valid for PLS motors lubricated with ESSO UNIREX N3 grease, which is used as standard.

Motor type	Regreasing intervals in hours			
	3000 min^{-1}	1500 min^{-1}	1000 min^{-1}	750 min^{-1}
PLS 160	Permanently greased bearings (motors supplied without grease nipples)			
PLS 180				
PLS 200				
PLS 225	7400	15,000	20,000	-
PLS 250	5200	12600	17600	-
PLS 280	5200	12,600	17,600	-
PLS 315 S/M/L/SU/MU	5800	9800	15,800	-
PLS 315 LD	5200	9000	14,400	-
PLS 315 MG/LG/VLG/VLGU	3400	9000	18,000	27,000
PLS 355	3400	7400	16,000	24,000
PLS 400	-	4600	12,000	20,000

C4 - Bearings and lubrication

C4.3 - TYPES OF BEARING AND STANDARD FITTING ARRANGEMENTS

		Horizontal shaft	Vertical shaft	
			Shaft facing down	Shaft facing up
	Mounting arrangement	B3/B6/B7/B8	V5	V6
Foot-mounted motors	standard mounting	The DE bearing is: - located at DE for frame ≤ 180 - locked at DE for frame ≥ 200	The DE bearing is: - located at DE for frame ≤ 180 - locked at DE for frame ≥ 200	The DE bearing is: - locked at DE for frame ≥ 160
	on request	DE bearing locked for frames ≤ 180	DE bearing locked for frames ≤ 180	
	Mounting arrangement	B5/B35/B14/B34	V1/V15/V18/V58	V3/V36/V19/V69
Foot-mounted (or foot and flange) motors	standard mounting	The DE bearing is locked	The DE bearing is locked	The DE bearing is locked

Important: When ordering, state correct mounting type and position (see section C1).

Motor		No. of poles	Standard fitting arrangement			
					Assembly diagram reference	
Frame size	LEROY-SOMER designation		Non drive end bearing (N.D.E.)	Drive end bearing (D.E.)	Foot-mounted motors	Flange-mounted (or foot and flange) motors
160	PLS 160 M	2 ; 4	6208 2RS C3	6210 2RS C3	1 (2 for V6)	2
160	PLS 160 MG	6	6210 2RS C3	6310 2RS C3	1 (2 for V6)	2
160	PLS 160 L	2 ; 4 ; 6	6210 2RS C3	6310 2RS C3	1 (2 for V6)	2
180	PLS 180 M	2 ; 4 ; 6	6210 2RS C3	6212 2RS C3	1 (2 for V6)	2
180	PLS 180 L	2 ; 4	6210 2RS C3	6212 2RS C3	1 (2 for V6)	2
180	PLS 180 LG	6	6212 Z C3	6312 C3	3	3
200	PLS 200 M	2 ; 4 ; 6	6212 Z C3	6313 C3	3	3
200	PLS 200 LP	2 ; 4	6212 Z C3	6313 C3	3	3
200	PLS 200 L	6	6214 C3	6314 C3	3	3
225	PLS 225 (MR/MU)	2 ; 4 ; 6	6214 C3	6314 C3	4	4
250	PLS 250 SP	2 ; 4 ; 6	6314 C3	6317 C3	5	5
250	PLS 250 MP	2 ; 4 ; 6	6314 C3	6317 C3	5	5
280	PLS 280 SC	4 ; 6	6314 C3	6317 C3	5	5
280	PLS 280 MC	2	6314 C3	6317 C3	5	5
280	PLS 280 MD	4 ; 6	6314 C3	6317 C3	5	5
315	PLS 315 (S/M/L)	2	6316 C3	6316 C3	7	7
315	PLS 315 (S/M/L)	4	6316 C3	6320 C3	8	8
315	PLS 315 (SU/MU/L)	6	6316 C3	6320 C3	8	8
315	PLS 315 LD	2	6316 C3	6219 C3	7	7
315	PLS 315 LD	4 ; 6	6316 C3	6224 C3	8	8
315	PLS 315 MG	2	6317 C3	6317 C3	7	7
315	PLS 315 MG	4 ; 6 ; 8	6317 C3	6322 C3	8	8
315	PLS 315 LG	2	6317 C3	6317 C3	7	7
315	PLS 315 LG	4 ; 6 ; 8	6317 C3	6322 C3	8	8
315	PLS 315 (VLG)	2	6317 C3	6317 C3	7	7
315	PLS 315 (VLG/VLGU)	4 ; 6 ; 8	6317 C3	6322 C3	8	8
355	PLS 355 (LA/LB)	2	6317 C3	6317 C3	9	9
355	PLS 355 (LA/LB)	4 ; 6 ; 8	6324 C3	6324 C3	9	9
400	PLS 400 (LA/LB)	4 ; 6 ; 8	6328 C3	6328 C3	9	9

C4 - Bearings and lubrication

C4.3.1 - Bearing assembly diagrams

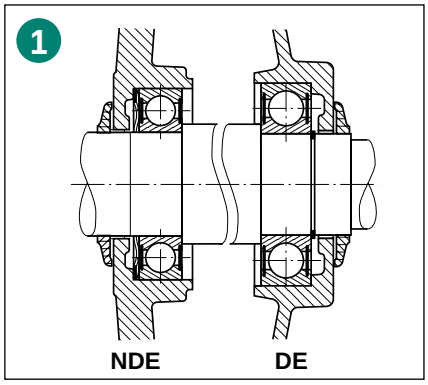

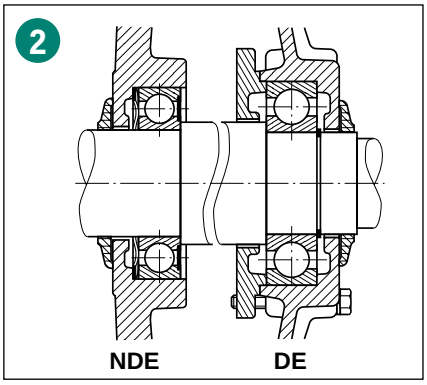

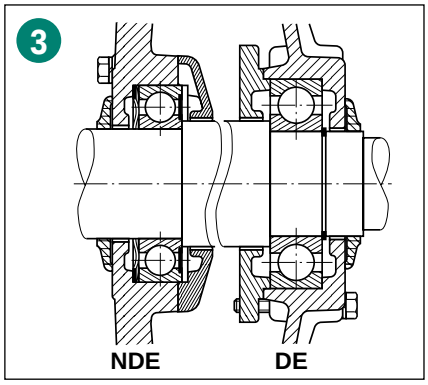

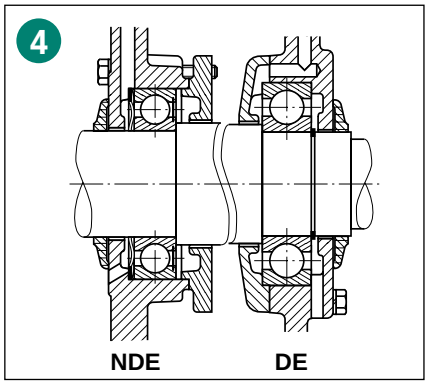

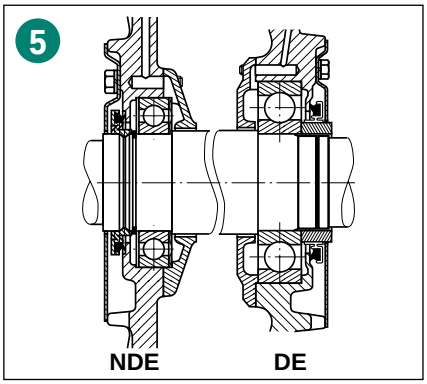

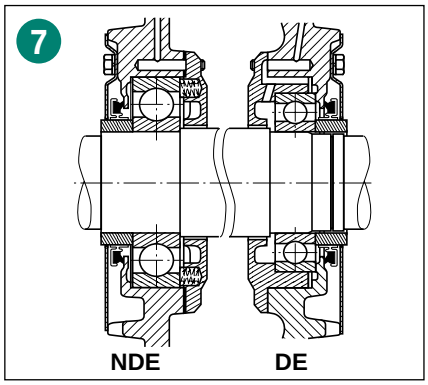

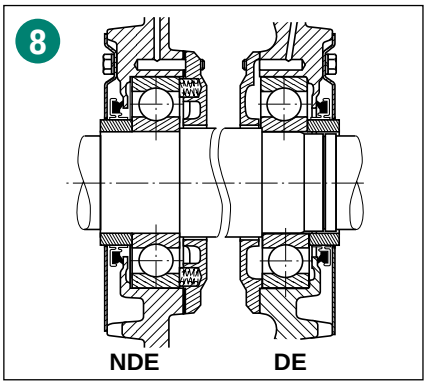

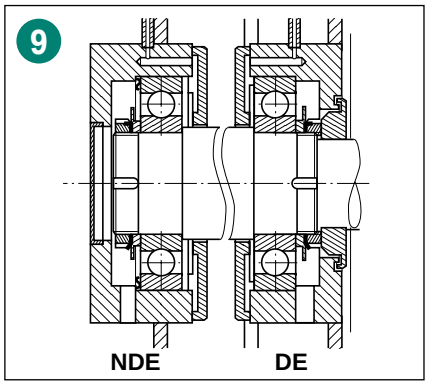

C4 - Bearings and lubrication

C4.3.2 - Permissible axial load (in daN) on main shaft extension for standard bearing assembly

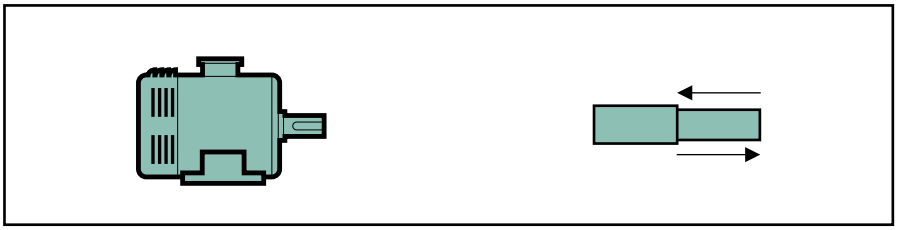

Horizontal motor

Nominal lifetime L_{10h} of bearings: 25,000 hours

Motor		2 poles N = 3000 min^{-1}		4 poles N = 1500 min^{-1}		6 poles N = 1000 min^{-1}		8 poles N = 750 min^{-1}	
Frame size	Type	→	←	→	←	→	←	→	←
		IM B3/B6 IM B7/B8 IM B5/B35 IM B14/B34	IM B3/B6 IM B7/B8 IM B5/B35 IM B14/B34	IM B3/B6 IM B7/B8 IM B5/B35 IM B14/B34	IM B3/B6 IM B7/B8 IM B5/B35 IM B14/B34	IM B3/B6 IM B7/B8 IM B5/B35 IM B14/B34	IM B3/B6 IM B7/B8 IM B5/B35 IM B14/B34	IM B3/B6 IM B7/B8 IM B5/B35 IM B14/B34	IM B3/B6 IM B7/B8 IM B5/B35 IM B14/B34
160	PLS 160 M (M/MG)	30	(110)*	46	(170)*	322	(422)*	-	-
	PLS 160 L	110	(210)*	210	(310)*	256	(356)*	-	-
180	PLS 180 M	93	(193)*	123	(223)*	159	(259)*	-	-
	PLS 180 L (L/LG)	95	(195)*	115	(215)*	372	420	-	-
200	PLS 200 M	149	197	344	392	425	473	-	-
	PLS 200 L (L/LP)	277	325	350	398	478	544	-	-
225	PLS 225 M (MR/MU)	306	372	411	477	461	527	-	-
250	PLS 250 SP	465	385	599	519	693	613	-	-
	PLS 250 MP	454	374	581	501	675	595	-	-
280	PLS 280 SC	-	-	587	507	618	538	-	-
	PLS 280 MC	449	369	-	-	-	-	-	-
	PLS 280 MD	-	-	557	477	646	566		
315	PLS 315 S (S/SU)	471	291	771	591	855	675	-	-
	PLS 315 M (M/MU)	460	280	739	559	842	662	-	-
	PLS 315 L	443	263	678	498	820	640	-	-
	PLS 315 LD	368	188	573	393	586	406	-	-
	PLS 315 MG	540	240	931	630	1077	777	1193	893
	PLS 315 LG	521	221	900	600	1050	750	1140	840
	PLS 315 VLG	508	208	880	580	1012	712	1086	786
	PLS 315 VLGU	-	-	846	546	980	680	-	-
355	PLS 355 L (LA/LB)	135	415	414	694	530	810	600	881
400	PLS 400 L (LA/LB)	-	-	552	906	635	990	667	1021

( )* The axial loads shown above for IM B3/B6/B7/B8 with frame size ≤ 180 are the permissible axial loads for locked DE bearings (non-standard assembly, special order).

C4 - Bearings and lubrication

C4.3.2 - Permissible axial load (in daN) on main shaft extension for standard bearing assembly

Vertical motor
Shaft facing down

Nominal lifetime L_{10h}
of bearings: 25,000 hours

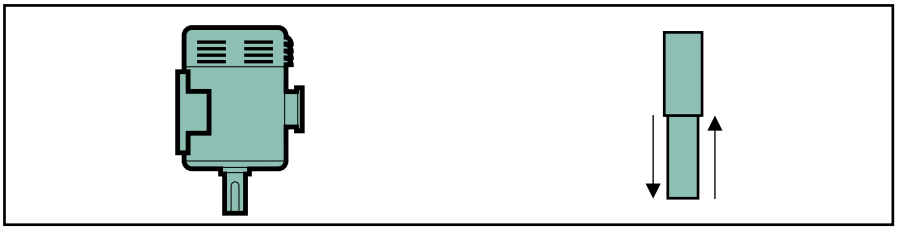

Motor		2 poles N = 3000 min^{-1}		4 poles N = 1500 min^{-1}		6 poles N = 1000 min^{-1}		8 poles N = 750 min^{-1}	
Frame size	Type	↓ IM V5 IM V1/V15 IM V18/V58..	↑ IM V5 IM V1/V15 IM V18/V69..	↓ IM V5 IM V1/V15 IM V18/V69..	↑ IM V5 IM V1/V15 IM V18/V69..	↓ IM V5 IM V1/V15 IM V18/V69..	↑ IM V5 IM V1/V15 IM V18/V69..	↓ IM V5 IM V1/V15 IM V18/V69..	↑ IM V5 IM V1/V15 IM V18/V69..
160	PLS 160 M (M/MG)	45	(160)*	60	(226)*	296	(472)*	-	-
	PLS 160 L	85	(210)*	192	(341)*	230	(405)*	-	-
180	PLS 180 M	72	(226)*	101	(263)*	126	(314)*	-	-
	PLS 180 L (L/LG)	71	(234)*	85	(266)*	337	486	-	-
200	PLS 200 M	130	256	309	458	382	553	-	-
	PLS 200 L (L/LP)	238	385	304	475	425	634	-	-
225	PLS 225 M (MR/MU)	232	416	351	577	398	645	-	-
250	PLS 250 SP	393	491	507	661	580	756	-	-
	PLS 250 MP	378	493	482	660	600	762	-	-
280	PLS 280 SC	-	-	477	685	502	748	-	-
	PLS 280 MC	364	503	-	-	-	-	-	-
	PLS 280 MD	-	-	431	695	508	820	-	-
315	PLS 315 S (S/SU)	336	491	620	824	644	1018	-	-
	PLS 315 M (M/MU)	311	505	564	836	621	1048	-	-
	PLS 315 L	273	529	477	839	570	1066	-	-
	PLS 315 LD	171	494	321	818	324	898	-	-
	PLS 315 MG	357	517	682	1010	765	1252	937	1310
	PLS 315 LG	300	560	587	1072	713	1277	816	1364
	PLS 315 VLG	270	580	557	1085	610	1346	706	1412
	PLS 315 VLGU	-	-	483	1125	570	1357	-	-
355	PLS 355 L (LA/LB)	402	396	573	893	580	1220	614	1394
400	PLS 400 L (LA/LB)	-	-	568	1309	612	1627	680	1756

( )* The axial loads shown above for IM V5 with frame size ≤ 180 are the permissible axial loads for locked DE bearings (non-standard assembly, special order).

C4.3.2 - Permissible axial load (in daN) on main shaft extension for standard bearing assembly

Vertical motor
Shaft facing up

Nominal lifetime L_{10h}
of bearings: 25,000 hours

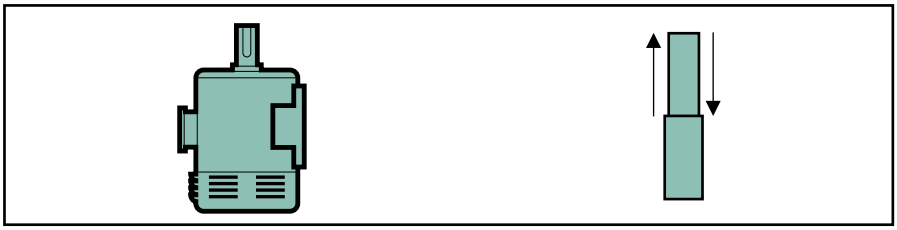

Motor		2 poles N = 3000 min^{-1}		4 poles N = 1500 min^{-1}		6 poles N = 1000 min^{-1}		8 poles N = 750 min^{-1}	
Frame size	Type	↓ IM V6 IM V3/V36 IM V19/V69..	↑ IM V6 IM V3/V36 IM V19/V69..	↓ IM V6 IM V3/V36 IM V19/V69..	↑ IM V6 IM V3/V36 IM V19/V69..	↓ IM V6 IM V3/V36 IM V19/V69..	↑ IM V6 IM V3/V36 IM V19/V69..	↓ IM V6 IM V3/V36 IM V19/V69..	↑ IM V6 IM V3/V36 IM V19/V69..
160	PLS 160 M (M/MG)	145	45	184	102	396	372	-	-
	PLS 160 L	185	110	292	241	330	305	-	-
180	PLS 180 M	172	126	201	163	226	214	-	-
	PLS 180 L (L/LG)	171	134	185	166	385	438	-	-
200	PLS 200 M	178	208	357	410	430	505	-	-
	PLS 200 L (L/LP)	286	337	352	427	491	568	-	-
225	PLS 225 M (MR/MU)	298	350	417	511	464	579	-	-
250	PLS 250 SP	313	571	427	741	500	836	-	-
	PLS 250 MP	298	573	402	740	521	842	-	-
280	PLS 280 SC	-	-	397	765	422	828	-	-
	PLS 280 MC	284	583	-	-	-	-	-	-
	PLS 280 MD	-	-	351	775	428	900	-	-
315	PLS 315 S (S/SU)	156	671	440	1004	464	1198	-	-
	PLS 315 M (M/MU)	131	685	384	1016	441	1228	-	-
	PLS 315 L	93	709	297	1019	390	1246	-	-
	PLS 315 LD	0	674	141	998	144	1078	-	-
	PLS 315 MG	57	817	382	1311	465	1552	637	1610
	PLS 315 LG	0	859	287	1372	413	1577	516	1664
	PLS 315 VLG	30	878	257	1385	300	1646	406	1712
	PLS 315 VLGU	-	-	183	1425	270	1657	-	-
355	PLS 355 LA	600	1396	427	1893	422	2220	386	2394
400	PLS 400 L (LA/LB)	-	-	632	2570	790	3027	1020	3456

C4 - Bearings and lubrication

C4.3.3 - Permissible radial load on main shaft extension

In pulley and belt couplings, the drive shaft carrying the pulley is subjected to a radial force Fpr applied at a distance X (mm) from the shoulder of the shaft extension (length E).

● Radial force applied to drive shaft extension: Fpr

The radial force Fpr expressed in daN applied to the shaft extension is found by the formula.

$$Fpr = 1.91\ 10^6 \ \frac{P_N \cdot k}{D \cdot N_N} \pm P_P$$

where:
P_N = rated motor power (kW)
D = external diameter of the drive pulley (mm)
N_N = rated speed of the motor (min^{-1})
k = factor depending on the type of transmission
P_P = weight of the pulley (daN)
The weight of the pulley is positive when it acts in the same direction as the tension force in the belt (and negative when it acts in the opposite direction).

Range of values for factor k(*)

- toothed belts	k = 1 to 1.5
- V-belts	k = 2 to 2.5
- flat belts	
• with tensioner	k = 2.5 to 3
• without tensioner	k = 3 to 4

(*) A more accurate figure for factor k can be obtained from the transmission suppliers.

● Permission radial force on the drive shaft extension

The charts on the following pages indicate, for each type of motor, the radial force F_R at a distance X permissible on the drive end shaft extension, for a bearing life L_{10h} of 25,000 hours.
Note: For frame sizes ≥ 315 M, the selection charts are applicable for a motor installed with the shaft horizontal.

● Change in bearing life depending on the radial load factor

For a radial load Fpr ($Fpr \neq F_R$), applied at distance X, the bearing life L_{10h} changes, at a first approximation, in the ratio k_R, ($k_R = Fpr/F_R$) as shown in the chart opposite, for standard assemblies.
If the load factor k_R is greater than 1.05, you should consult our technical department, stating mounting position and direction of force before opting for a special fitting arrangement.

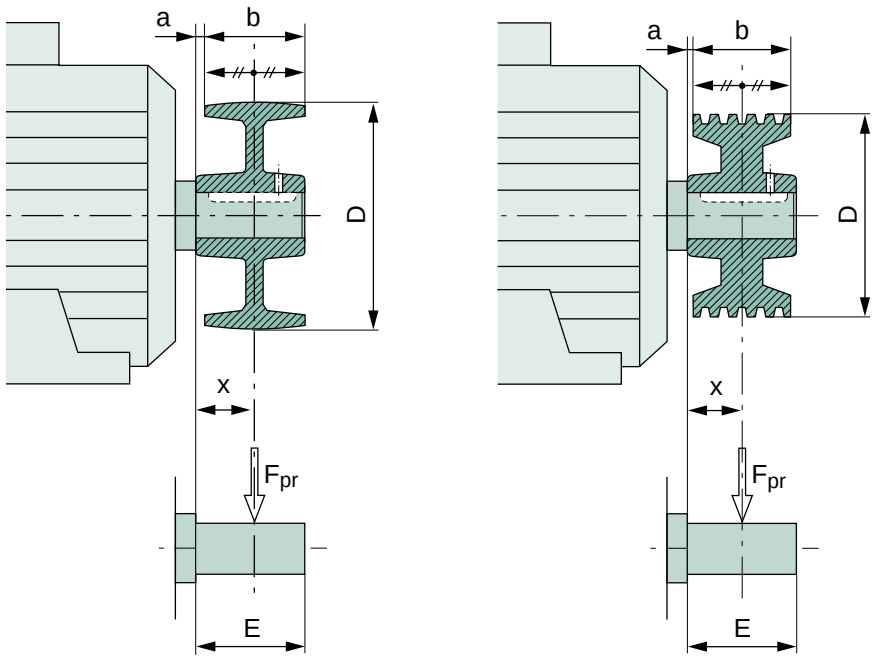

$$\begin{cases} x = a + \dfrac{b}{2} \\ \text{where} \\ x \leq E \end{cases} \qquad \begin{cases} x = a + \dfrac{b}{2} \\ \text{where} \\ x \leq E \end{cases}$$

▼ ***Change in bearing life L_{10h} depending on the radial load factor k_R for standard fitting arrangements.***

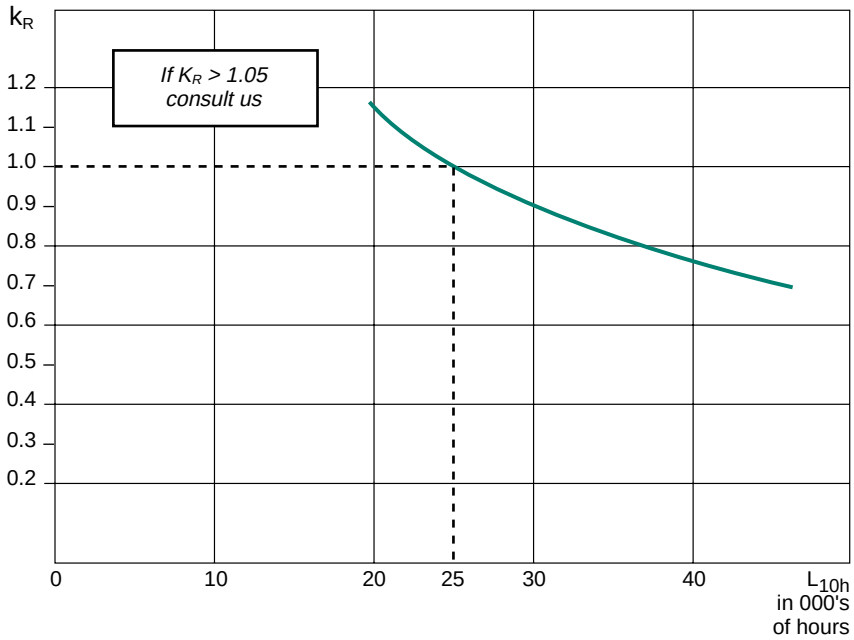

C4 - Bearings and lubrication

C4.3.3 - Standard fitting arrangement

Permissible radial load on main shaft extension with a bearing life L_{10h} of 25,000 hours.

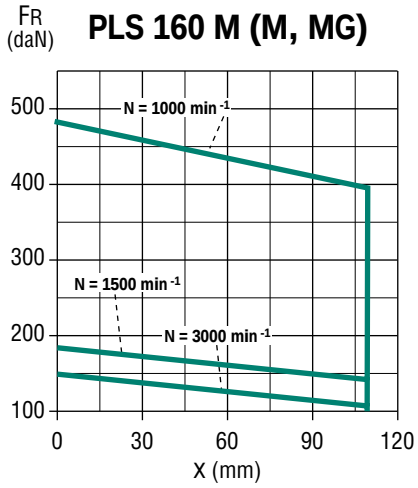

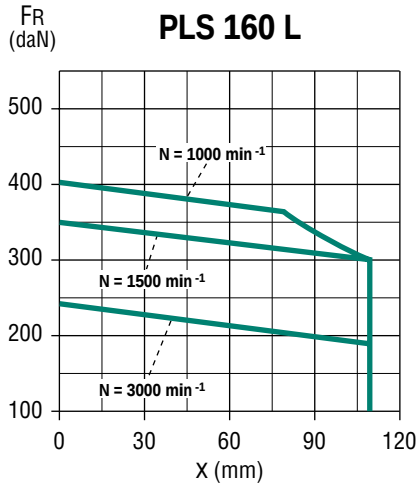

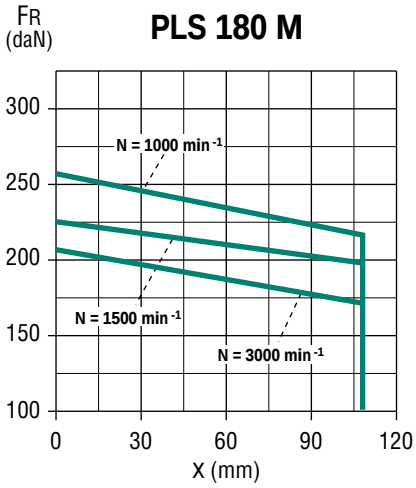

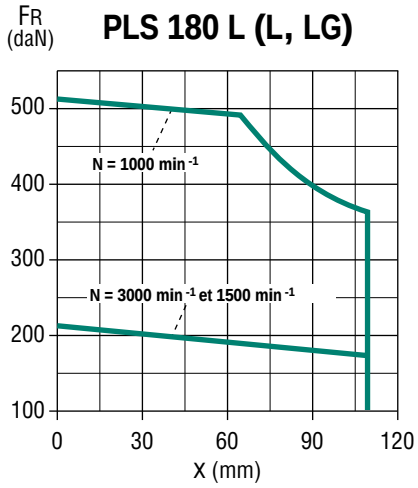

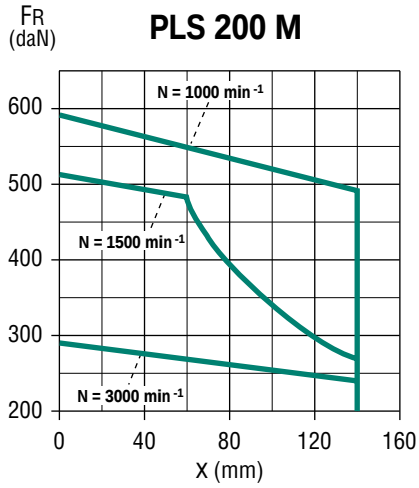

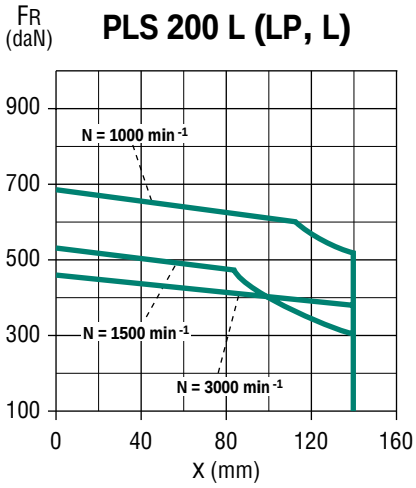

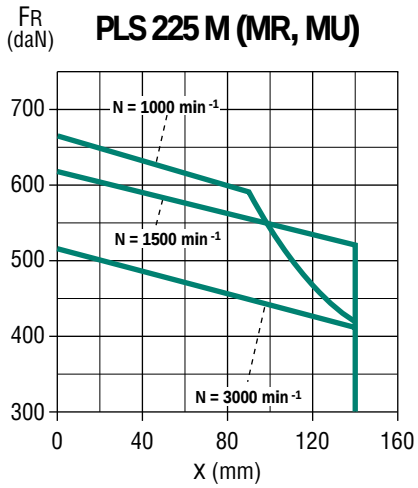

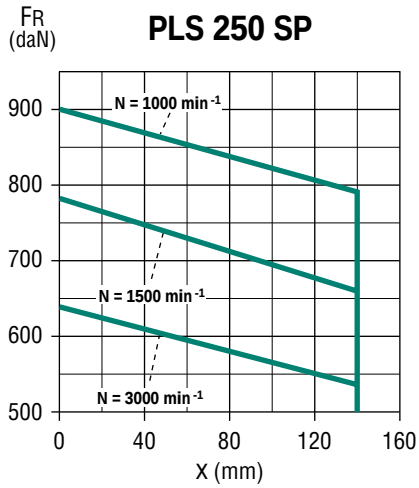

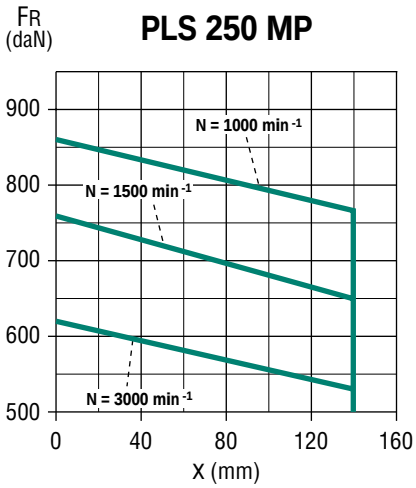

C4 - Bearings and lubrication

C4.3.3 - Standard fitting arrangement

Permissible radial load on main shaft extension with a bearing life L_{10h} of 25,000 hours.

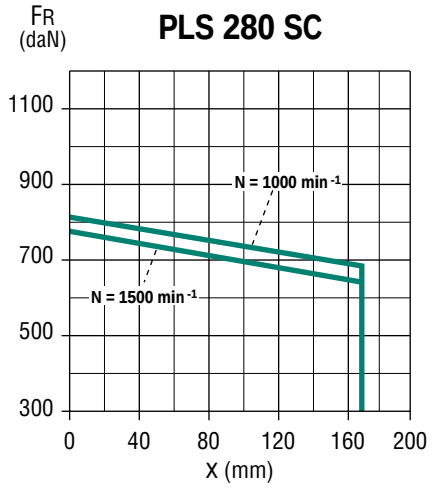

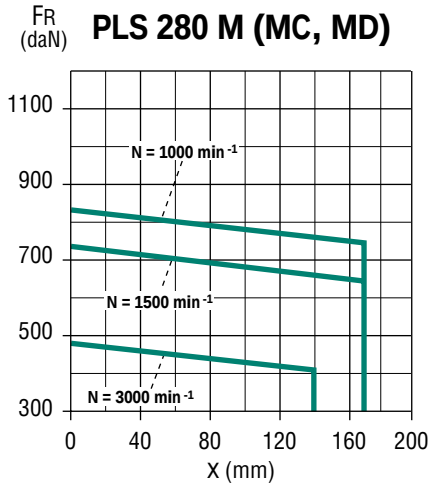

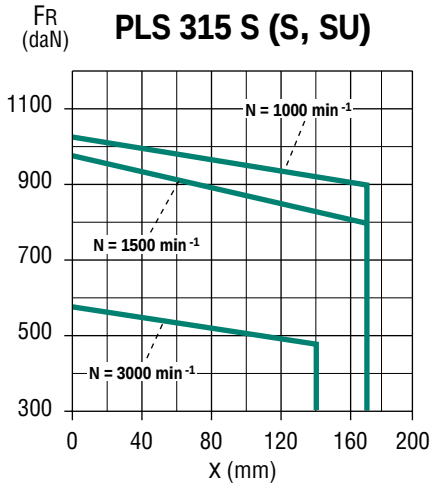

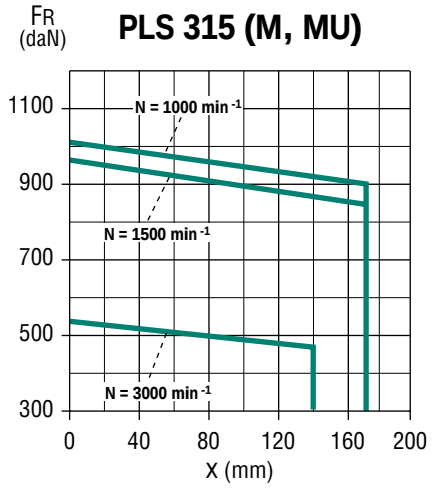

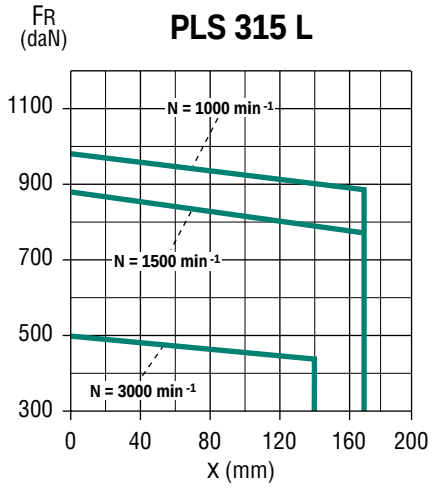

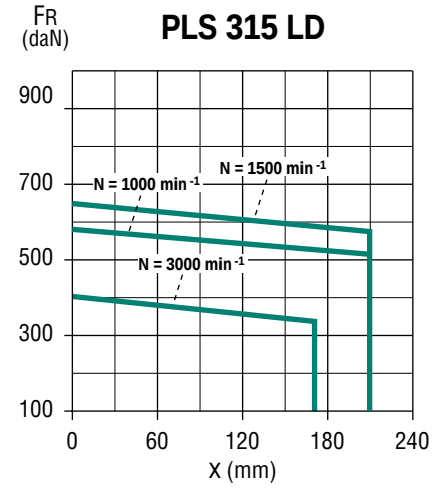

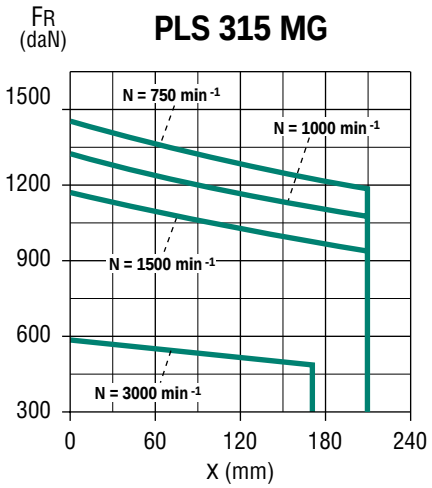

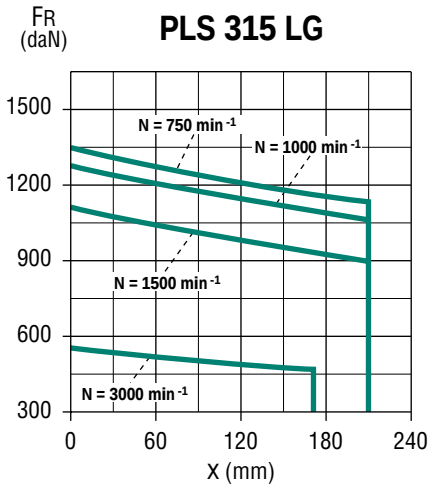

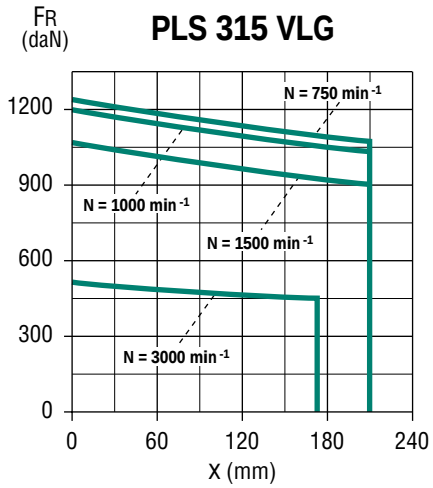

C4 - Bearings and lubrication

C4.3.3 - Standard fitting arrangement

Permissible radial load on main shaft extension with a bearing life L_{10h} of 25,000 hours.

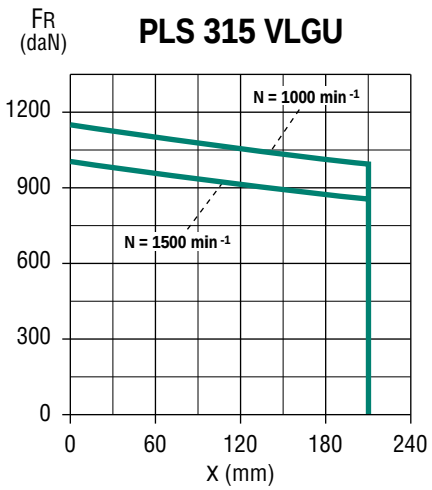

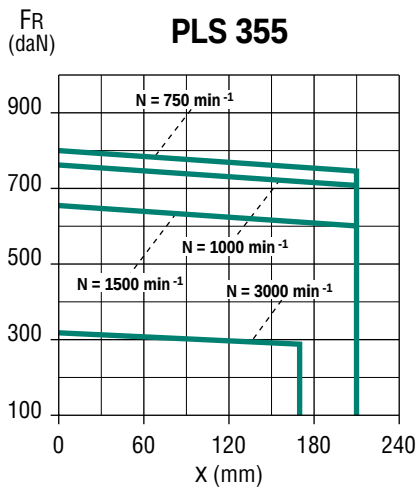

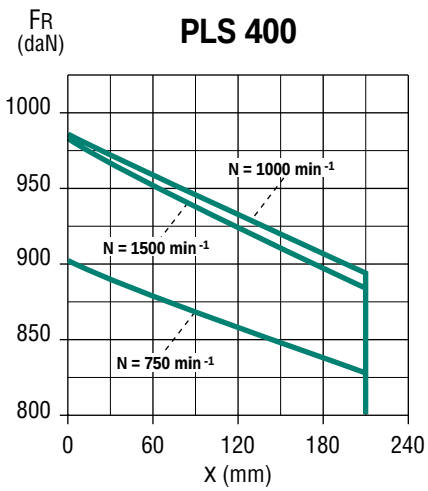

C4 - Bearings and lubrication

C4.4 - TYPES AND SPECIAL FITTING ARRANGEMENTS FOR DE ROLLER BEARINGS

Motor		No. of poles	Standard fitting arrangement			
					Assembly diagram reference	
Frame size	LEROY-SOMER designation		Non drive end bearing (N.D.E.)	Drive end bearing (D.E.)	Foot-mounted motors	Flange-mounted (or foot and flange) motors
160	PLS 160 M	4	6208 2RS C3	NU 210	1	1
160	PLS 160 MG	6	6210 Z C3	NU 310	1	1
160	PLS 160 L	4 ; 6	6210 Z C3	NU 310	1	1
180	PLS 180 M	4 ; 6	6210 Z C3	NU 212	1	1
180	PLS 180 L	4	6210 Z C3	NU 212	1	1
180	PLS 180 LG	6	6212 Z C3	NU 312	1	1
200	PLS 200 M	4 ; 6	6212 Z C3	NU 313	1	1
200	PLS 200 LP	4	6212 Z C3	NU 313	1	1
200	PLS 200 L	6	6214 C3	NU 314	1	1
225	PLS 225 (MR/MU)	4 ; 6	6214 C3	NU 314	1	1
250	PLS 250 SP	4 ; 6	6314 C3	NU 317	2	2
250	PLS 250 MP	4 ; 6	6314 C3	NU 317	2	2
280	PLS 280 SC	4 ; 6	6314 C3	NU 317	2	2
280	PLS 280 (MC/MD)	2 ; 4 ; 6	6314 C3	NU 317	2	2
315	PLS 315 (S/M/L)	4	6316 C3	NU 320	3	3
315	PLS 315 (SU/MU/L)	6	6316 C3	NU 320	3	3
315	PLS 315 LD	4 ; 6	6316 C3	NU 224	3	3
315	PLS 315 MG	4 ; 6 ; 8	6317 C3	NU 322 EC	3	3
315	PLS 315 LG	4 ; 6 ; 8	6317 C3	NU 322 EC	3	3
315	PLS 315 (VLG/VLGU)	4 ; 6 ; 8	6317 C3	NU 322 EC	3	3
355	PLS 355 (LA/LB)	4 ; 6 ; 8	6324 C3	NU 324 EC	4	4
400	PLS 400 (LA/LB)	4 ; 6 ; 8	6328 C3	NU 328 EC	4	4

C4.4.1 - Bearing assembly diagrams

1

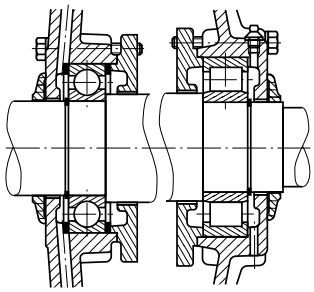

NDE DE

2

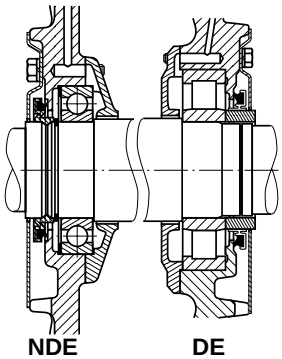

NDE DE

3

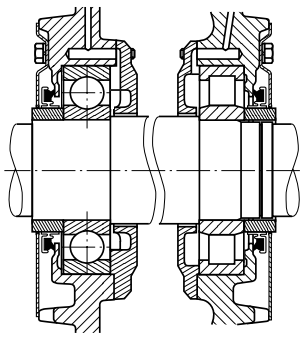

NDE DE

4

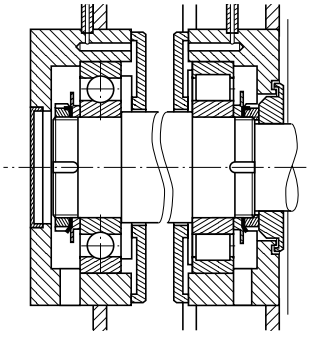

NDE DE

C4 - Bearings and lubrication

C4.4.2 - Special fitting arrangements

Permissible radial load on main shaft extension with a bearing life L_{10h} of 25,000 hours.

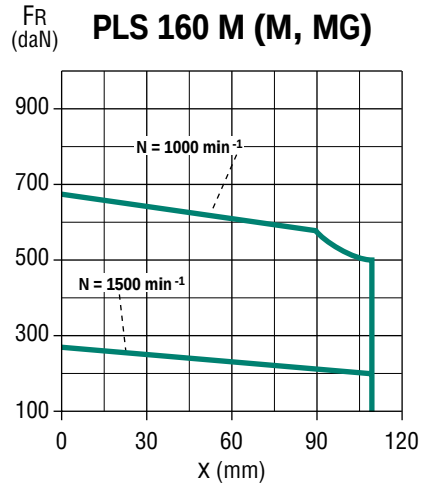

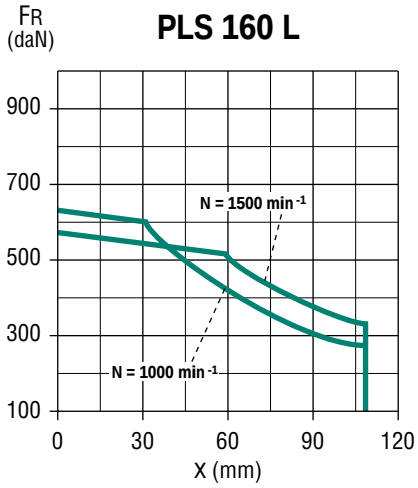

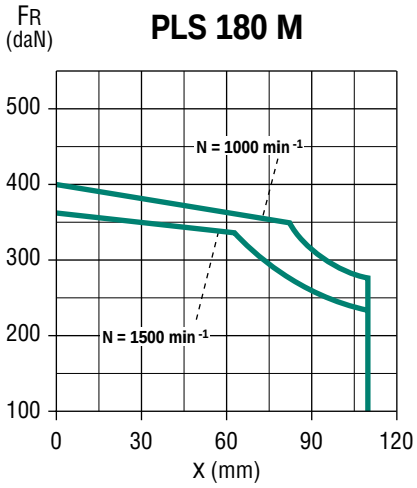

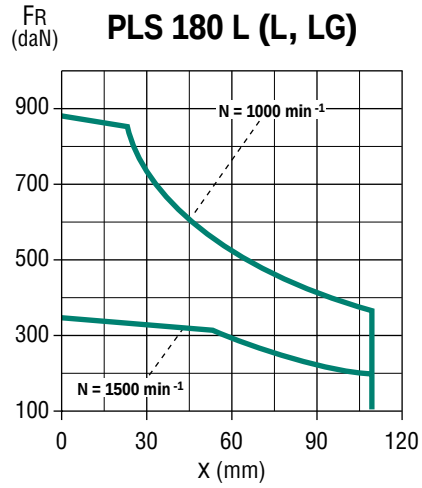

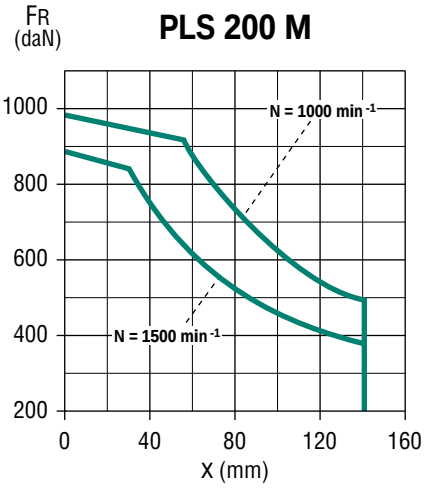

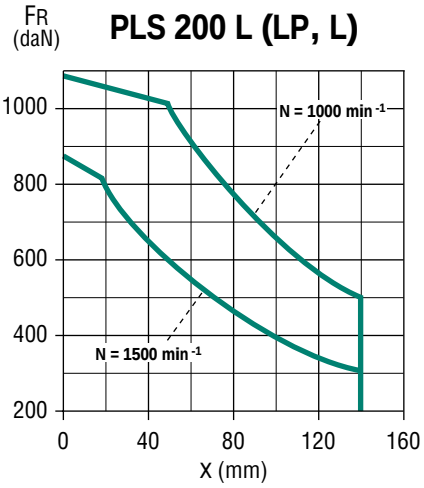

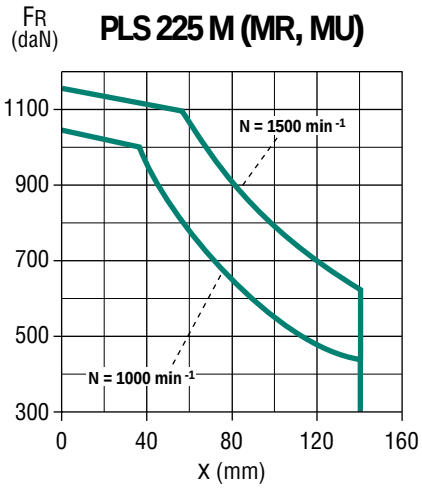

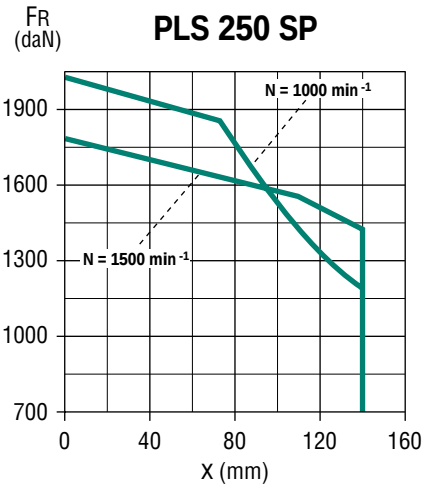

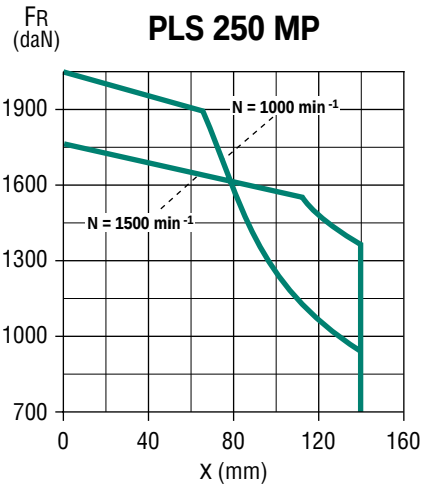

C4 - Bearings and lubrication

C4.4.2 - Special fitting arrangements

Permissible radial load on main shaft extension with a bearing life L_{10h} of 25,000 hours.

PLS 280 SC

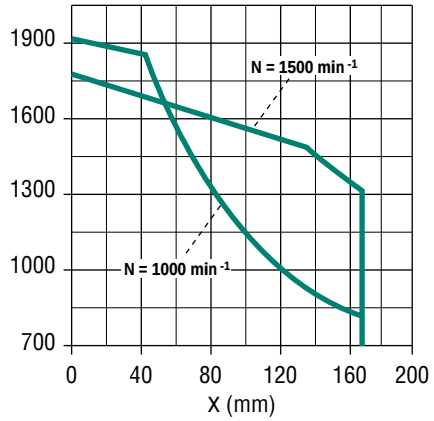

PLS 280 MD

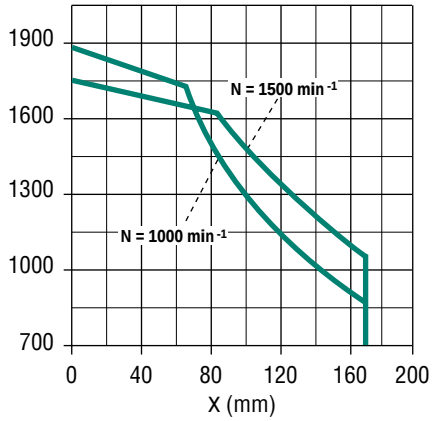

PLS 315 S (S, SU)

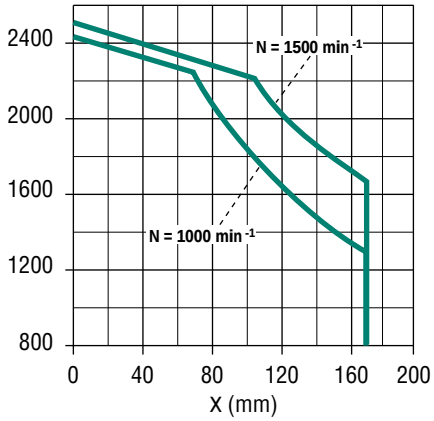

PLS 315 (M, MU)

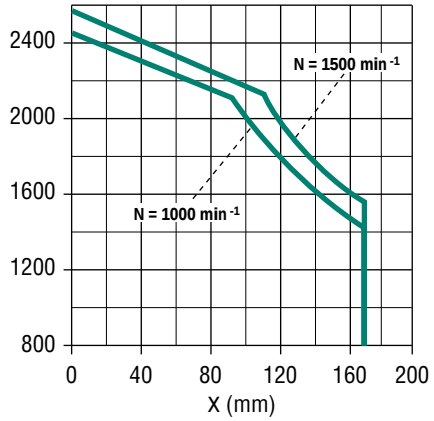

PLS 315 L

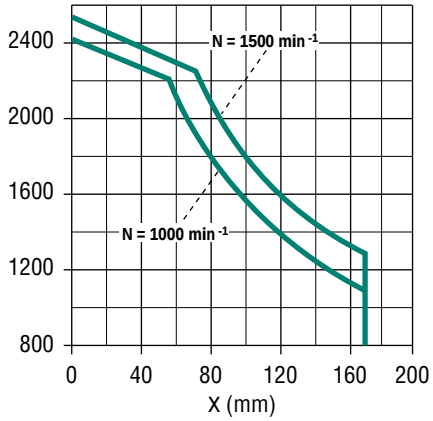

PLS 315 LD

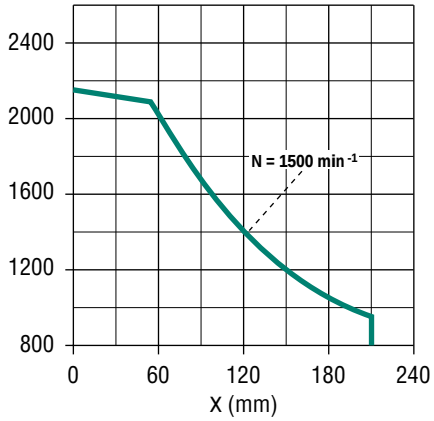

PLS 315 MG

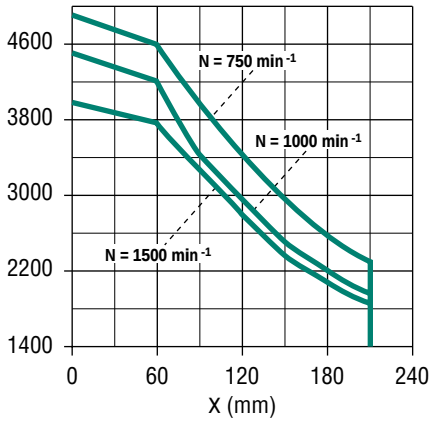

PLS 315 LG

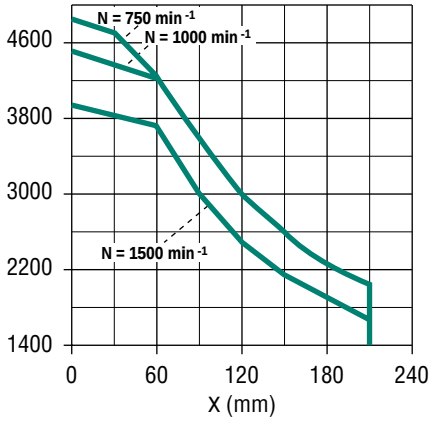

PLS 315 VLG

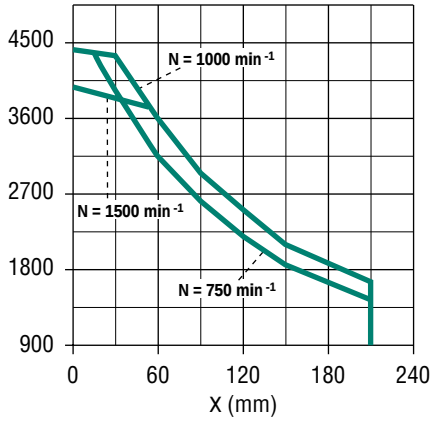

C4 - Bearings and lubrication

C4.4.2 - Special fitting arrangements

Permissible radial load on main shaft extension with a bearing life L_{10h} of 25,000 hours.

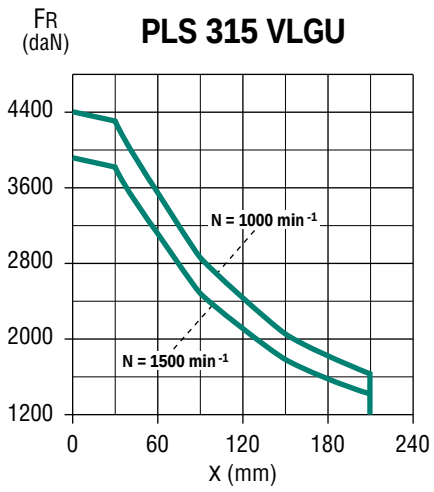

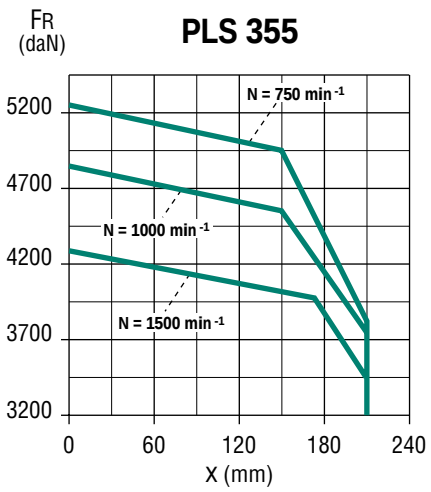

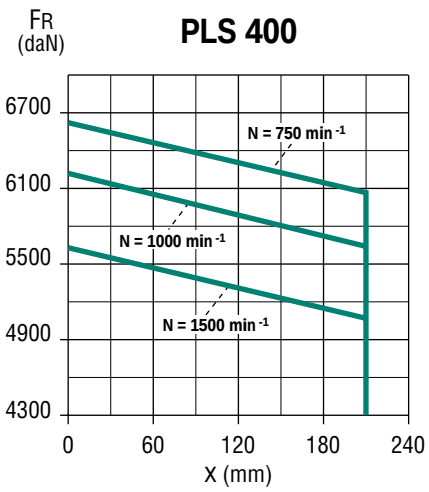

C

D1 - Supply voltage

D1.1 - REGULATIONS AND STANDARDS

The statement by the Electricity Consultative Committee dated 25th June 1982, and the 6th edition (1983) of publication No. 38 of the International Electrotechnical Committee (IEC) have laid down time scales for the harmonisation of standard voltages in Europe.
Since 1998, voltages at the point of delivery have to be maintained between the following extreme values:

- ***Single-phase current: 207 to 244 V***
- ***Three-phase current: 358 to 423 V***

The IEC 60038 standard gives the European reference voltage as 230/400 V three-phase and 230 V single-phase, with a tolerance of +6% to -10% until 2003 and ±10% from then on.

The tolerances usually permitted for power supply sources are indicated below:

- maximum line drop between customer delivery point and customer usage point: 4%.
- Variation in frequency around nominal frequency:
  - continuous state : ±1%
  - transient state : ±2%
- Three-phase mains phase-balance error:
  - zero-sequence component and/or negative phase sequence component compared to positive phase sequence component: < 2%
- Harmonics:
  - relative harmonic content: <10%
  - individual harmonic voltages: to be established
- Surges and transient power cuts: to be established

The motors in this catalogue are designed for use on the European power supply of 230/400 V ±10% - 50 Hz.

This means that the same motor can operate on the following existing supplies: - 220/380 V ±5%
- 230/400 V ±5% and ±10%
- 240/415 V ± 5%

and is therefore suitable for a large number of countries worldwide where for example it is possible to extend them to some 60 Hz supplies:
- 265/460 V ± 10%

From 2008, 380 and 415 V - 50 Hz voltage supplies must be eliminated.

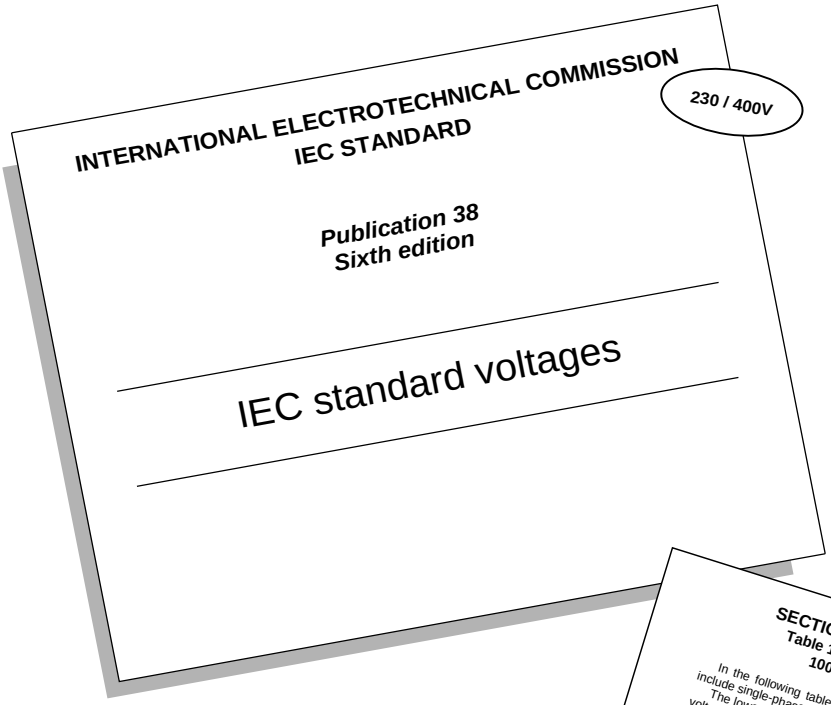

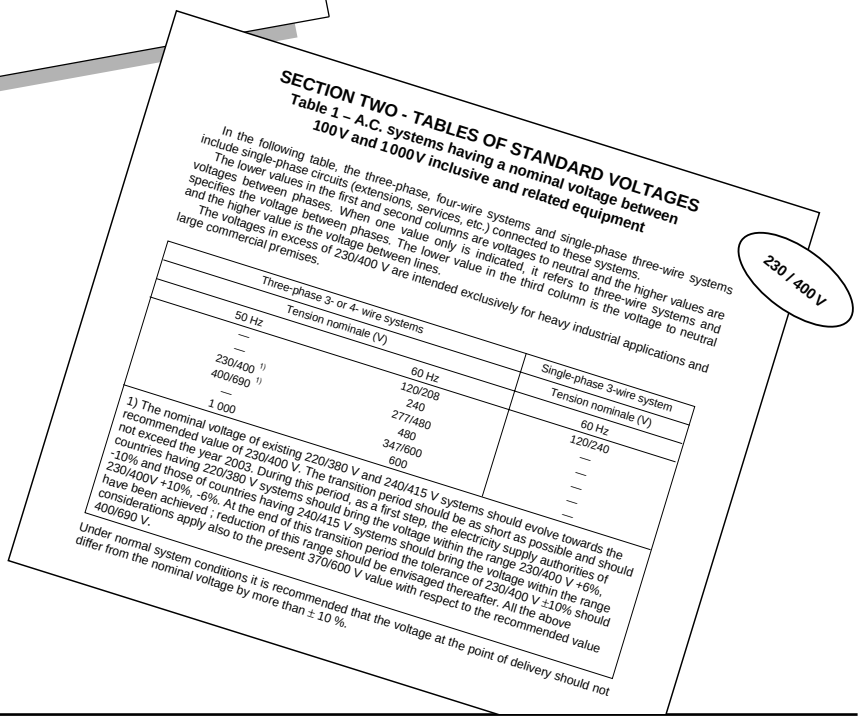

D1 - Supply voltage

D1.2 - EFFECTS ON MOTOR PERFORMANCE

D1.2.1 - Voltage range

The characteristics of motors will of course vary with a corresponding variation in voltage of ±10% around the rated value.

An approximation of these variations is given in the table opposite (precise values for each motor can be supplied on request).

	Voltage variation as a %				
	U_N-10%	U_N-5%	U_N	U_N+5%	U_N+10%
Torque curve	0.81	0.90	1	1.10	1.21
Slip	1.23	1.11	1	0.91	0.83
Rated current	1.10	1.05	1	0.98	0.98
Rated efficiency	0.97	0.98	1	1.00	0.98
Rated power factor (Cos φ)	1.03	1.02	1	0.97	0.94
Starting current	0.90	0.95	1	1.05	1.10
Nominal temperature rise	1.18	1.05*	1	1*	1.10
P (Watt) no-load	0.85	0.92	1	1.12	1.25
Q (reactive V A) no-load	0.81	0.9	1	1.1	1.21

* According to standard IEC 60034-1, the additional temperature rise must not exceed 10 K within ±5% of U_N.

D1.2.2 - Simultaneous variation of voltage and frequency

Within the tolerances defined in IEC guide 106, machine input and performance are unaffected if the variations are of the same polarity and the voltage/frequency ratio U/f remains constant.
If this is not the case, variations in performance are significant and require the machine specification to be changed.

Variation in main motor parameters (approx.) within the limits defined in IEC Guide 106.

U/f	Pu	M	N	Cos φ	Efficiency
Constant	$Pu\frac{f'}{f}$	M	$N\frac{f'}{f}$	cos φ unchanged	Efficiency unchanged
Variable	$Pu\frac{f'}{f}\left(\frac{u'}{u}\right)^2$	$M\frac{(u'/u)^2}{f/f'}$	$N\frac{f'}{f}$	Depends on level of saturation of machine	

M = minimum and maximum values of starting torque.

D1.2.3 - Phase voltage imbalance

The phase imbalance for voltage is calculated as follows:

$$\text{\% Voltage imbalance} = 100 \times \frac{\text{maximum difference in voltage compared to average voltage value}}{\text{average voltage value}}$$

The effect on motor performance is summarized in the table opposite.

If this imbalance is known before the motor is purchased, it is advisable, in order to establish the type of motor required, to apply the derating specified in standard IEC 60892, illustrated on the graph opposite.

Percentage imbalance	0	2	3.5	5
Stator current	100	101	104	107.5
Increase in losses	0	4	12.5	25
Temperature rise	1	1.05	1.14	1.28

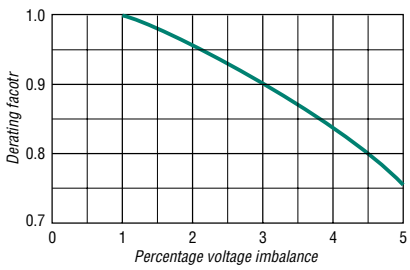

D1.2.4 - Phase current imbalance

Voltage imbalances induce current imbalances. Natural lack of symmetry due to manufacture also induces current imbalances.

D2 - Power - Torque - Efficiency - Power Factor (Cos φ)

D2.1 - DEFINITIONS

The output power (Pu) at the motor shaft is linked to the torque (M) by the equation:

$$Pu = M.\omega$$

where Pu is in W, M is in N.m, ω is in rad/s and where ω is expressed as a function of the speed of rotation in min^{-1} by the equation:

$$\omega = 2\pi.N/60$$

The active power (P) drawn from the mains is expressed as a function of the apparent power (S) and the reactive power (Q) by the equation:

$$S = \sqrt{P^2 + Q^2}$$

(S in VA, P in W and Q in VAR)

The power P is linked to the output power Pu by the equation:

$$P = \frac{Pu}{\eta}$$

where η is the efficiency of the machine.

The output power Pu at the motor shaft is expressed as a function of the phase-to-phase mains voltage (U in Volts), of the line current absorbed (I in Amps) by the equation:

$$Pu = U.I.\ \sqrt{3}\ .\ \cos\varphi\ .\ \eta$$

where cosφ is the power factor found from the ratio:

$$\cos\varphi = \frac{P}{S}$$

D2.2 - RATED POWER IN RELATION TO FRAME SIZE AND NUMBER OF POLES

The table below (NFC 51-160) shows rated power for continuous operation according to frame size.

Frame size	RATED POWER FOR CONTINUOUS OPERATION			
	2 poles 3000 min^{-1}	4 poles 1500 min^{-1}	6 poles 1000 min^{-1}	8 poles 750 min^{-1}
	kW	kW	kW	kW
160 M	11 - 15	11	7.5	5.5
160 L	18.5 - 22	15 - 18.5	11	7.5
180 M	30	22	15	11
180 L	37	30	18.5	15
200 M	45	37	22	18.5
200 L	55	45	30	22
225 M	75	55	37	30
250 S	90	75	45	37
250 M	110	90	55	45
280 S	-	110	75	55
280 M	132	132	90	75
315 S	160	160	110	90
315 M	200	200	132	110

D2.3 - INFLUENCE OF MOTOR LOAD ON POWER FACTOR COS φ AND EFFICIENCY

Efficiency and power factor cos φ vary according to the motor load.

The table opposite gives the intermediate load values that correspond to the full load (4/4) values shown in the motor selection tables.

These values are average values and are to be used for information only.

Efficiency η						Power factor Cos φ					
1/2	3/4	4/4	1/2	3/4	4/4	1/2	3/4	4/4	1/2	3/4	4/4
94.5	96	**96**	72	75	**75**	0.86	0.9	**0.92**	0.5	0.62	**0.71**
93.5	95	**95**	71	74	**74**	0.85	0.89	**0.91**	0.49	0.62	**0.7**
92.5	94	**94**	70	73	**73**	0.83	0.88	**0.9**	0.48	0.61	**0.69**
91.5	93	**93**	68	72	**72**	0.8	0.86	**0.89**	0.47	0.6	**0.68**
91	92	**92**	67	71	**71**	0.78	0.85	**0.88**	0.46	0.59	**0.67**
90	91	**91**	66	70	**70**	0.76	0.84	**0.87**	0.46	0.59	**0.66**
89	90	**90**	65	69	**69**	0.75	0.83	**0.86**	0.46	0.58	**0.65**
88	89	**89**	64	67	**68**	0.73	0.81	**0.85**	0.46	0.58	**0.64**
87	88	**88**	62	66	**67**	0.71	0.8	**0.84**	0.45	0.57	**0.63**
86	87	**87**	61	65	**66**	0.69	0.79	**0.83**	0.44	0.56	**0.62**
85	86	**86**	60	64	**65**	0.67	0.77	**0.82**	0.44	0.56	**0.61**
84	85	**85**	59	63	**64**	0.66	0.76	**0.81**	0.44	0.55	**0.6**
83	84	**84**	57	62	**63**	0.65	0.75	**0.8**			
82	83	**83**	56	60	**62**	0.63	0.74	**0.79**			
81	82	**82**	55	59	**61**	0.61	0.72	**0.78**			
80	81	**81**	54	58	**60**	0.59	0.71	**0.77**			
79	80	**80**	53	58	**59**	0.58	0.7	**0.76**			
77	79	**79**	52	57	**58**	0.56	0.69	**0.75**			
76	78	**78**	51	55	**57**	0.55	0.68	**0.74**			
75	77	**77**	49	54	**56**	0.54	0.67	**0.73**			
73	76	**76**				0.52	0.63	**0.72**			

D3 - Noise and vibration

The PLS machines in this catalogue are standard N class, half-key balancing

D3.1 - MOTOR NOISE LEVELS

Under IEC 60034-9, the guaranteed values are given for a machine operating at no-load under normal supply conditions (IEC 60034-1), in the actual operating position, or sometimes in the direction of rotation as specified in the design, at synchronous speed at 50Hz.

This being the case, standardized sound power level limits are shown for the values obtained for the machines described in this catalogue. (Measurements were taken in conformity with standard ISO 1680).

Expressed as sound power level (Lw) according to the standard, the level of sound is also shown as sound pressure level (Lp) in the table below for 50 Hz motors:

Motor type	2 poles			4 poles			6 poles			8 poles		
	IEC 60034-9	PLS	PLS	IEC 60034-9	PLS	PLS	IEC 60034-9	PLS	PLS	IEC 60034-9	PLS	PLS
	Power LwA		Pressure LpA	Power LwA		Pressure LpA	Power LwA		Pressure LpA	Power LwA		Pressure LpA
PLS 160 M and L	96	87	76	91	78	67	85	77	66	-	-	-
PLS 180 M	99	89	78	91	80	69	88	77	66	-	-	-
PLS 180 L (L/LG)	99	89	78	94	80	69	88	77	66	-	-	-
PLS 200 M	101	90	79	94	84	72	88	78	67	-	-	-
PLS 200 L (L/LP)	101	90	79	97	84	72	91	78	67	-	-	-
PLS 225 M (MR/MU)	103	90	79	97	86	74	91	78	67	-	-	-
PLS 250 S and M	103	90	79	100	87	75	94	79	68	-	-	-
PLS 280 S (SC)	105	90	79	100	87	75	97	79	68	-	-	-
PLS 280 M (MC/MD)	105	90	79	103	87	75	97	79	68	-	-	-
PLS 315 S (S/SU)	107	97	85	103	96	84	97	88	76	-	-	-
PLS 315 M (M/MU)	107	97	85	103	96	84	100	88	76	-	-	-
PLS 315 L	107	97	85	106	96	84	100	88	76	-	-	-
PLS 315 LD	107	99	87	106	96	84	100	88	76	-	-	-
PLS 315 MG	107	101	89	106	98	86	100	89	77	97	89	77
PLS 315 LG	107	101	89	106	98	86	103	89	77	97	89	77
PLS 315 VLG/VLGU	107	101	89	106	98	86	103	89	77	97	89	77
PLS 355 LA	107	102	90	106	102	90	103	94	82	99	92	80
PLS 355 LB	109	102	90	108	102	90	103	94	82	99	92	80
PLS 400 LA	-	-	-	108	103	91	103	94	82	99	92	80
PLS 400 LB	-	-	-	108	103	91	106	94	82	99	92	80

The maximum standard tolerance for all these values is + 3 dB(A).

D3.2 - VIBRATION LEVELS - BALANCING

Under standard NFC 51-111, the machines in this catalogue are classed N. Classes R and S are available on request.
Vibration levels of machines with frame size ≥ 315 (not included in the standard) will have to be agreed in advance between customer and supplier. By default, targeted vibration levels are N for 315 M.
Under standard ISO 8821, rotating machines can be balanced with or without a key or with a half-key on the shaft extension. Standard ISO 8821 requires the balancing method to be marked on the shaft extension as follows:
- half-key balancing: letter H
- full key balancing: letter F
- no-key balancing: letter N

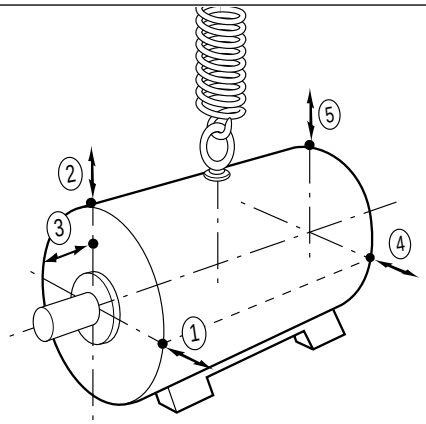

▲ ***Measuring system for suspended machines***

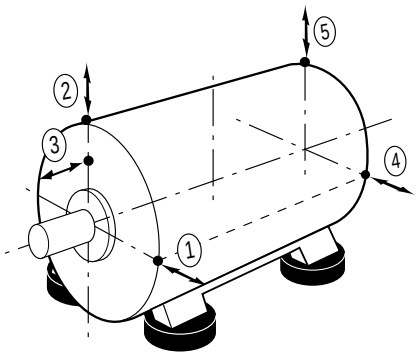

▲ ***Measuring system for machines on flexible mountings***

The measurement points quoted in the standards are the ones indicated in the drawings above.
At each point, the results should be lower than those given in the standard for each balancing class, and only the highest value is to be taken as the "vibration level".

D

PLS
Drip-proof 3-phase induction motors
Electrical characteristics

PAGES

E1 - Selection data

2 poles - 3000 min^{-1} ..... 38 - 39

4 poles - 1500 min^{-1} ..... 40 - 41

6 poles - 1000 min^{-1} ..... 42 - 43

8 poles - 750 min^{-1} ..... 44 - 45

E

PLS
Drip-proof 3-phase induction motors
Electrical characteristics

E1 - Selection data

2 poles 3000 min^{-1}

IP 23
Cl. F - ΔT 80 K
MULTI-VOLTAGE

MAINS SUPPLY Δ 230 / Y 400 V or **Δ 400 V** **50 Hz**

Type	*Rated power at 50 Hz P_N kW	Rated speed N_N min^{-1}	Rated torque C_N N.m	Rated current I_N (400 V) A	**Power factor Cos φ	*** Efficiency η	Starting current/ Rated current I_D/I_N	Starting torque/ Rated torque M_D/M_N	Maximum torque/ Rated torque M_M/M_N	Moment of inertia J kg.m^2	Weight IM B3 kg
PLS 160 M	11	2875	36	22.5	0.83	86	6.8	2.6	2.5	0.0099	57
PLS 160 M	15	2860	50	30.3	0.84	85	6.5	2.3	2.3	0.0126	65
PLS 160 L	18.5	2934	60	35.1	0.85	89.5	6.7	2.6	2.9	0.037	80
PLS 160 L	22	2936	71	42	0.84	90	7.2	2.7	3	0.041	86
PLS 180 M	30	2936	97	57.2	0.84	90.1	7.5	2.6	3.3	0.054	102
PLS 180 L	37	2940	120	67.2	0.87	91.4	7.3	2.8	3.1	0.081	123
PLS 200 M	45	2950	146	83.1	0.85	92	7.3	2.2	3	0.102	170
PLS 200 LP	55	2950	178	96.9	0.88	93.1	7.7	2.8	3.2	0.140	185
PLS 225 MR	75	2945	243	134	0.87	92.9	7.6	2.8	3.1	0.17	240
PLS 250 SP	90	2960	290	163	0.85	93.8	7.4	2.4	3.1	0.40	325
PLS 250 MP	110	2960	355	196	0.86	94.2	7.7	2.5	3.3	0.44	350
PLS 280 MC	132	2958	426	232	0.87	94.6	7.8	2.5	3.5	0.48	455
PLS 315 S	160	2974	514	276	0.88	95	8.2	2.7	3.4	1.25	645
PLS 315 M	200	2974	642	341	0.89	95.2	8.3	2.8	3.4	1.42	705
PLS 315 L	250	2974	803	421	0.9	95.3	8.2	2.9	3.4	1.68	790
PLS 315 LD	280	2972	900	466	0.91	95.4	8	2.8	3.1	1.97	900
PLS 315 MG	280	2965	902	503	0.85	94.5	6.4	1.8	2.1	2.3	910
PLS 315 LD	315	2972	1012	529	0.9	95.5	8.3	3.1	3.4	1.97	910
PLS 315 MG	315	2965	1015	557	0.86	95	6.4	1.8	2.1	2.5	940
PLS 315 LG	355	2965	1143	617	0.87	95.5	6.5	1.7	2	2.8	1030
PLS 315 LG	400	2965	1288	695	0.87	95.5	7	1.9	2	3.1	1120
PLS 315 VLG	450	2975	1444	778	0.87	96	7	1.9	2.1	3.5	1200
PLS 355 LA	500	2978	1603	864	0.87	96	8.4	1.6	2.2	6.3	1700
PLS 355 LB	710	2978	2277	1207	0.88	96.5	8.4	1.6	2.2	8	2050

* Power ratings higher than 710 kW can be ordered. Please consult Leroy-Somer.

**Power factor - Cos φ	***Efficiency - η	Calculation of rated torque	Noise level
Use on 3/4 and 1/2 load: section D	Use on 3/4 and 1/2 load: section D	$M_N = \frac{60 \times P_N}{2\pi\ N_N}$	section D

PLS
Drip-proof 3-phase induction motors
Electrical characteristics

E1 - Selection data

		MAINS SUPPLY 380 V 50 Hz				MAINS SUPPLY 415 V 50 Hz				MAINS SUPPLY 460 V 60 Hz can be used from 440V to 480V				
	*Rated power at 50 Hz	Rated speed	Rated current	**Power factor	*** Efficiency	Rated speed	Rated current	**Power factor	*** Efficiency	*Rated power at 60 Hz	Rated speed	Rated current	**Power factor	*** Efficiency
Type	P_N kW	N_N min^{-1}	I_N A	Cos φ	η	N_N min^{-1}	I_N A	Cos φ	η	P_N kW	N_N min^{-1}	I_N A	Cos φ	η
PLS 160 M	11	2875	23.1	0.84	86	2880	21.7	0.82	86	13.2	3475	23.2	0.83	86
PLS 160 M	15	2855	31.5	0.85	85	2865	29.2	0.84	85	18	3470	31.3	0.85	85
PLS 160 L	18.5	2926	35.7	0.88	89.4	2940	35.1	0.82	89.4	21	3532	33.7	0.87	90
PLS 160 L	22	2928	42.7	0.87	89.9	2942	42	0.81	89.9	25	3534	40.3	0.86	90.6
PLS 180 M	30	2928	57.6	0.88	90	2942	57.3	0.81	90	34	3532	54.2	0.87	90.5
PLS 180 L	37	2930	68.6	0.9	91	2945	67.1	0.84	91.3	42	3540	66.3	0.87	91.4
PLS 200 M	45	2940	83.5	0.89	92	2950	83.1	0.82	91.9	52	3550	83.5	0.85	92
PLS 200 LP	55	2940	98.7	0.91	93	2955	96.7	0.85	93.1	63	3550	96.5	0.88	93.1
PLS 225 MR	75	2945	136	0.9	93	2945	136	0.83	92.7	86	3545	134	0.87	92.9
PLS 250 SP	90	2956	166	0.88	93.7	2964	163	0.82	93.9	103	3560	160	0.86	93.9
PLS 250 MP	110	2956	200	0.89	94.1	2964	198	0.82	94.3	126	3560	193	0.87	94.3
PLS 280 MC	132	2952	238	0.89	94.5	2964	228	0.85	94.6	152	3554	226	0.89	94.8
PLS 315 S	160	2970	284	0.9	95	2976	276	0.85	95	184	3572	273	0.89	94.9
PLS 315 M	200	2970	351	0.91	95.1	2976	336	0.87	95.2	230	3572	337	0.9	95.2
PLS 315 L	250	2970	434	0.92	95.2	2976	415	0.88	95.3	288	3572	417	0.91	95.3
PLS 315 LD	280	2968	486	0.92	95.2	2974	454	0.9	95.4	322	3570	461	0.92	95.3
PLS 315 MG	280	2960	526	0.855	94.5	2965	497	0.83	94.5	320•	3560	499	0.85	94.7
PLS 315 LD	315	2968	551	0.91	95.4	2974	521	0.88	95.5	360	3570	520	0.91	95.5
PLS 315 MG	315	2960	585	0.865	94.5	2965	552	0.84	94.5	360•	3560	555	0.86	94.7
PLS 315 LG	355	2960	649	0.875	95	2965	612	0.85	95	410•	3565	623	0.87	95
PLS 315 LG	400	2960	727	0.875	95.5	2965	686	0.85	95.5	460•	3565	695	0.87	95.5
PLS 315 VLG	450	2970	818	0.875	95.5	2975	771	0.85	95.5	515•	3570	778	0.87	95.5
PLS 355 LA	500	2975	904	0.875	96	2980	884	0.85	96	On request				
PLS 355 LB	710	2975	1256	0.89	96.5	2980	1190	0.86	96.5	On request				

• Class F temperature rise

* Power ratings higher than 710 kW can be ordered. Please consult Leroy-Somer.

E

PLS
Drip-proof 3-phase induction motors
Electrical characteristics

E1 - Selection data

4 poles 1500 min^{-1}

IP 23
Cl. F - ΔT 80 K
MULTI-VOLTAGE

MAINS SUPPLY Δ 230 / Y 400 V or Δ 400 V **50 Hz**

Type	*Rated power at 50 Hz P_N kW	Rated speed N_N min^{-1}	Rated torque C_N N.m	Rated current I_N (400 V) A	**Power factor Cos φ	*** Efficiency η	Starting current/ Rated current I_D/I_N	Starting torque/ Rated torque M_D/M_N	Maximum torque/ Rated torque M_M/M_N	Moment of inertia J kg.m^2	Weight IM B3 kg
PLS 160 M	11	1435	73	23.6	0.81	83	6.5	2.5	2.6	0.0334	61
PLS 160 L	15	1450	99	30.2	0.83	86.4	5.9	2	2.6	0.049	80
PLS 160 L	18.5	1445	122	36.9	0.83	87.2	6	2.1	2.7	0.063	88
PLS 180 M	22	1450	145	43.5	0.83	88	6.4	2.3	2.8	0.074	98
PLS 180 L	30	1450	198	57.1	0.85	89.2	5.7	2.4	2.5	0.123	128
PLS 200 M	37	1445	245	71.4	0.84	89	5.4	2.3	2.4	0.15	165
PLS 200 LP	45	1465	293	84.7	0.84	91.3	6.1	2.5	2.5	0.22	190
PLS 225 MR	55	1465	359	101	0.86	91.5	5.9	2.2	2.3	0.36	240
PLS 250 SP	75	1475	485	143	0.82	92.6	6.2	2.4	2.5	0.65	335
PLS 250 MP	90	1475	583	167	0.84	92.8	6.5	2.5	2.6	0.75	360
PLS 280 SC	110	1472	714	207	0.82	93.4	5.7	2.2	2.5	0.87	460
PLS 280 MD	132	1470	857	245	0.83	93.7	6.2	2.4	2.6	1.07	520
PLS 315 S	160	1468	1041	291	0.85	93.5	6.1	2.1	2.7	2.07	635
PLS 315 M	200	1468	1301	363	0.85	93.6	6.3	2.2	2.8	2.48	720
PLS 315 L	250	1470	1624	452	0.85	94	7.3	2.6	2.9	2.96	820
PLS 315 LD	280	1472	1816	504	0.85	94.3	7.2	2.6	2.8	3.45	935
PLS 315 MG	280	1475	1813	509	0.84	94.5	5.5	1.6	2	4.1	910
PLS 315 MG	315	1475	2039	573	0.84	94.5	5.5	1.6	2	4.6	940
PLS 315 LG	355	1477	2295	645	0.84	94.5	5.5	1.8	2	5.3	1030
PLS 315 LG	400	1477	2586	724	0.84	95	6	1.7	2.1	5.9	1130
PLS 315 VLG	450	1480	2904	804	0.85	95	6	1.7	2.1	6.3	1280
PLS 315 VLGU•	500	1479	3228	889	0.85	95.5	6	1.6	2.1	6.8	1350
PLS 355 LA	550	1487	3532	973	0.85	96	6.8	1.6	2.2	10.5	1900
PLS 355 LB	685	1488	4396	1211	0.85	96	7	1.6	2.2	12	2150
PLS 400 LA	720	1491	4611	1267	0.85	96.5	7.5	1.7	2.2	21.6	2600
PLS 400 LB•	900	1491	5764	1584	0.85	96.5	7	1.65	2.2	27	3050

• Class F temperature rise

* Power ratings higher than 900 kW can be ordered. Please consult Leroy-Somer.

**Power factor - Cos φ	***Efficiency - η	Calculation of rated torque	Noise level
Use on 3/4 and 1/2 load: section D	Use on 3/4 and 1/2 load: section D	$M_N = \frac{60 \times P_N}{2\pi\ N_N}$	section D

PLS
Drip-proof 3-phase induction motors
Electrical characteristics

E1 - Selection data

		MAINS SUPPLY 380 V 50 Hz				MAINS SUPPLY 415 V 50 Hz					MAINS SUPPLY 460 V 60 Hz can be used from 440V to 480V			
	*Rated power at 50 Hz	Rated speed	Rated current	**Power factor	*** Efficiency	Rated speed	Rated current	**Power factor	*** Efficiency	*Rated power at 60 Hz	Rated speed	Rated current	**Power factor	*** Efficiency
Type	P_N kW	N_N min^{-1}	I_N A	Cos φ	η	N_N min^{-1}	I_N A	Cos φ	η	P_N kW	N_N min^{-1}	I_N A	Cos φ	η
PLS 160 M	11	1430	24.5	0.82	83	1435	22.8	0.81	83	13.2	1735	24.3	0.81	84
PLS 160 L	15	1445	30.4	0.87	86.1	1455	30.8	0.79	85.8	17	1750	29.8	0.83	86.4
PLS 160 L	18.5	1435	37.2	0.87	86.8	1450	37.3	0.79	87.3	21	1745	36.4	0.83	87.2
PLS 180 M	22	1440	43.8	0.87	87.8	1455	44.1	0.79	87.9	25	1750	43	0.83	88
PLS 180 L	30	1440	59.9	0.86	88.5	1455	57	0.82	89.3	34	1750	56.3	0.85	89.2
PLS 200 M	37	1435	73.9	0.86	88.4	1455	69.3	0.83	89.5	42	1745	70.5	0.84	89
PLS 200 LP	45	1460	87.4	0.86	91	1470	84.7	0.81	91.2	52	1765	85.1	0.84	91.3
PLS 225 MR	55	1455	106	0.87	91	1470	99.6	0.83	91.6	63	1765	100.5	0.86	91.5
PLS 250 SP	75	1470	145	0.85	92.5	1475	141	0.8	92.4	86	1775	142	0.82	92.6
PLS 250 MP	90	1470	172	0.86	92.7	1475	165	0.82	92.8	103	1775	166	0.84	92.8
PLS 280 SC	110	1466	214	0.84	92.8	1475	205	0.8	93.4	126	1770	201	0.84	93.6
PLS 280 MD	132	1468	253	0.85	93.3	1475	242	0.81	93.7	152	1768	242	0.84	94
PLS 315 S	160	1463	300	0.87	93.2	1470	283	0.84	93.6	184	1765	287	0.86	93.7
PLS 315 M	200	1460	375	0.87	93.2	1470	354	0.84	93.6	230	1765	354	0.87	93.7
PLS 315 L	250	1467	465	0.87	93.9	1473	446	0.83	94	288	1767	441	0.87	94.2
PLS 315 LD	280	1467	520	0.87	94	1474	498	0.83	94.3	322	1770	497	0.86	94.6
PLS 315 MG	280	1472	530	0.85	94.5	1475	497	0.83	94.5	320	1770	497	0.85	95
PLS 315 MG	315	1473	596	0.85	94.5	1475	559	0.83	94.5	360	1770	559	0.85	95
PLS 315 LG	355	1475	671	0.85	94.5	1478	630	0.83	94.5	405	1770	630	0.85	95
PLS 315 LG	400	1475	753	0.85	95	1478	706	0.83	95	460	1775	711	0.85	95.5
PLS 315 VLG	450	1477	837	0.86	95	1480	784	0.84	95	515	1775	787	0.86	95.5
PLS 315 VLGU•	500	1478	925	0.86	95.5	1480	867	0.84	95.5	575	1775	879	0.86	95.5
PLS 355 LA	550	1485	1012	0.86	96	1487	955	0.83	96.5	630	1780	953	0.86	96.5
PLS 355 LB	685	1485	1260	0.86	96	1488	1190	0.83	96.5	750	1780	1135	0.86	96.5
PLS 400 LA	720	1490	1318	0.86	96.5	1492	1248	0.83	96.7	800	1782	1223	0.86	96.7
PLS 400 LB•	900	1490	1647	0.86	96.5	1491	1560	0.83	96.7	1000	1782	1508	0.86	96.8

• Class F temperature rise

* Power ratings higher than 900 kW can be ordered. Please consult Leroy-Somer.

PLS
Drip-proof 3-phase induction motors
Electrical characteristics

E1 - Selection data

6 poles 1000 min^{-1}

IP 23
Cl. F - ΔT 80 K
MULTI-VOLTAGE

MAINS SUPPLY Δ 230 / Y 400 V or Δ 400 V **50 Hz**

Type	*Rated power at 50 Hz P_N kW	Rated speed N_N min^{-1}	Rated torque C_N N.m	Rated current I_N (400 V) A	**Power factor Cos φ	*** Efficiency η	Starting current/ Rated current I_D/I_N	Starting torque/ Rated torque M_D/M_N	Maximum torque/ Rated torque M_M/M_N	Moment of inertia J kg.m^2	Weight IM B3 kg
PLS 160 MG	7.5	970	74	17.1	0.75	84.5	5	1.67	2.3	0.085	81
PLS 160 L	11	960	109	22.6	0.8	87.9	5.2	1.8	2.1	0.116	102
PLS 180 M	15	960	149	30.4	0.81	88	5.2	2.1	2.2	0.17	114
PLS 180 LG	18.5	960	184	37.3	0.82	87.2	5.2	2	2.3	0.193	144
PLS 200 M	22	980	214	45.3	0.79	88.8	6.5	2.2	2.9	0.27	169
PLS 200 L	30	968	296	60.4	0.8	89.6	5.5	2	2.5	0.32	230
PLS 225 MR	37	966	366	74.3	0.8	89.9	5.8	2.2	2.6	0.39	240
PLS 250 SP	45	976	440	91.7	0.77	92	6	2.2	2.6	0.82	310
PLS 250 MP	55	976	538	112	0.77	92	5.9	2.2	2.6	0.88	325
PLS 280 SC	75	974	735	152	0.77	92.2	5.9	2.2	2.6	1.16	465
PLS 280 MD	90	978	879	173	0.81	92.8	5.2	2.1	2.4	1.44	525
PLS 315 SU	110	978	1074	208	0.82	93.1	6	2.1	2.5	3.36	645
PLS 315 MU	132	982	1284	251	0.81	93.9	5.1	2.1	2.3	3.54	750
PLS 315 L	160	982	1556	303	0.81	94.1	5.2	2.2	2.4	4.16	840
PLS 315 LD	180	982	1750	341	0.81	94.2	5.1	2.2	2.4	4.43	910
PLS 315 MG	180	980	1754	358	0.78	93	6.5	1.9	2.1	5.9	920
PLS 315 LD	200	982	1945	390	0.79	93.8	4.9	2.2	2.4	4.43	910
PLS 315 MG	200	980	1950	389	0.79	94	6.4	1.9	2.1	6.5	980
PLS 315 MG	220	980	2144	422	0.80	94	6.6	2	2.2	7.3	1030
PLS 315 LG	250	980	2436	477	0.80	94.5	6.6	2	2.2	8	1100
PLS 315 VLG	280	980	2728	525	0.81	95	6.7	2.1	2.1	9.6	1330
PLS 315 VLGU	315	985	3054	591	0.81	95	6.9	2.1	2.1	10.8	1430
PLS 355 LA	370	990	3569	687	0.81	96	7.2	1.3	2.1	15	1940
PLS 355 LB	450	990	4341	835	0.81	96	7.2	1.3	2.1	18	2210
PLS 400 LA	500	990	4823	917	0.82	96	7.4	1.4	2.1	29	2720
PLS 400 LB	600	990	5787	1100	0.82	96	7.8	1.4	2.2	35	3100

* Power ratings higher than 600 kW can be ordered. Please consult Leroy-Somer.

**Power factor - Cos φ	***Efficiency - η	Calculation of rated torque	Noise level
Use on 3/4 and 1/2 load: section D	Use on 3/4 and 1/2 load: section D	$M_N = \frac{60 \times P_N}{2\pi\ N_N}$	section D

PLS
Drip-proof 3-phase induction motors
Electrical characteristics

E1 - Selection data

		MAINS SUPPLY 380 V 50 Hz				MAINS SUPPLY 415 V 50 Hz					MAINS SUPPLY 460 V 60 Hz can be used from 440V to 480V			
	*Rated power at 50 Hz	Rated speed	Rated current	**Power factor	*** Efficiency	Rated speed	Rated current	**Power factor	*** Efficiency	*Rated power at 60 Hz	Rated speed	Rated current	**Power factor	*** Efficiency
Type	P_N kW	N_N min^{-1}	I_N A	Cos φ	η	N_N min^{-1}	I_N A	Cos φ	η	P_N kW	N_N min^{-1}	I_N A	Cos φ	η
PLS 160 MG	7.5	965	17.1	0.79	84.3	975	17.4	0.71	84.7	8.6	1170	17	0.75	84.5
PLS 160 L	11	955	23.2	0.82	87.8	965	22.9	0.76	88	12.6	1160	22.5	0.8	87.9
PLS 180 M	15	960	31.2	0.83	87.9	965	30.8	0.77	88.1	17	1160	29.9	0.81	88
PLS 180 LG	18.5	960	38.4	0.84	87.1	965	37.8	0.78	87.3	21	1160	36.9	0.82	87.2
PLS 200 M	22	975	46.5	0.81	88.7	980	45.9	0.75	88.9	25	1180	44.9	0.79	88.5
PLS 200 L	30	964	62.2	0.82	89.3	972	58.7	0.79	90	34	1168	58.2	0.81	90.6
PLS 225 MR	37	960	76.8	0.82	89.3	970	73.2	0.78	90.1	42	1166	71.6	0.81	90.9
PLS 250 SP	45	972	93	0.8	91.9	980	92.2	0.74	91.8	52	1172	88.5	0.8	92.2
PLS 250 MP	55	972	114	0.8	91.9	980	113	0.74	91.8	63	1172	107	0.8	92.2
PLS 280 SC	75	970	155	0.8	92.1	978	153	0.74	92	86	1176	146	0.8	92.4
PLS 280 MD	90	974	178	0.83	92.5	980	173	0.78	93	103	1170	172	0.81	92.7
PLS 315 SU	110	974	214	0.84	92.8	980	205	0.8	93.3	126	1176	205	0.83	92.8
PLS 315 MU	132	980	258	0.83	93.8	984	251	0.78	93.8	152	1184	251	0.81	94
PLS 315 L	160	980	312	0.83	94	984	304	0.78	94	184	1184	303	0.81	94.2
PLS 315 LD	180	980	350	0.83	94.1	984	341	0.78	94.1	200	1184	329	0.81	94.3
PLS 315 MG	180	978	370	0.79	93.5	980	359	0.75	93	200	1175	340	0.79	93.5
PLS 315 LD	200	980	395	0.82	93.9	984	390	0.76	93.8	230	1182	383	0.8	94.1
PLS 315 MG	200	978	409	0.79	94	980	397	0.75	93.5	230	1175	384	0.80	94
PLS 315 MG	220	978	445	0.80	94	980	423	0.77	94	250	1175	417	0.80	94
PLS 315 LG	250	978	496	0.81	94.5	982	478	0.77	94.5	280	1180	459	0.81	94.5
PLS 315 VLG	280	978	546	0.82	95	982	529	0.78	94.5	315	1180	508	0.82	95
PLS 315 VLGU	315	980	614	0.82	95	985	584	0.79	95	355	1180	572	0.82	95
PLS 355 LA	370	988	714	0.82	96	990	679	0.79	96	420	1185	678	0.81	96
PLS 355 LB	450	988	869	0.82	96	990	825	0.79	96	500	1185	805	0.81	96.2
PLS 400 LA	500	988	953	0.83	96	991	904	0.80	96.2	560	1186	890	0.82	96.3
PLS 400 LB	600	988	1144	0.83	96	991	1085	0.80	96.2	670	1186	1065	0.82	96.3

* Power ratings higher than 600 kW can be ordered. Please consult Leroy-Somer.

PLS
Drip-proof 3-phase induction motors
Electrical characteristics

E1 - Selection data

8 poles 750 min^{-1}

IP 23
Cl. F - ΔT 80 K
MULTI-VOLTAGE

MAINS SUPPLY Δ 230 / Y 400 V or **Δ 400 V** **50 Hz**

Type	*Rated power at 50 Hz P_N kW	Rated speed N_N min^{-1}	Rated torque C_N N.m	Rated current I_N (400 V) A	**Power factor Cos φ	*** Efficiency η	Starting current/ Rated current I_D/I_N	Starting torque/ Rated torque M_D/M_N	Maximum torque/ Rated torque M_M/M_N	Moment of inertia J kg.m^2	Weight IM B3 kg
PLS 315 MG	132	735	1715	275	0.75	92.5	4.7	1.6	1.7	6.7	940
PLS 315 LG	160	735	2079	333	0.75	92.5	5	1.6	1.7	8	1090
PLS 315 LG	180	735	2338	373	0.75	93	5.2	1.6	1.8	8.9	1230
PLS 315 VLG	200	735	2598	414	0.75	93	5.2	1.6	1.8	10	1330
PLS 355 LA	285	740	3678	532	0.81	95.5	7.7	1.3	2.1	18.3	1940
PLS 355 LB	330	740	4258	617	0.81	95.5	7.6	1.3	2.2	19	2210
PLS 400 LA	375	740	4839	691	0.82	95.5	7.1	1.25	2.1	39	2720
PLS 400 LB	450	740	5807	830	0.82	95.5	7.1	1.25	2	47	3100

* Power ratings higher than 450 kW can be ordered. Please consult Leroy-Somer.

E

**Power factor - Cos φ	***Efficiency - η	Calculation of rated torque	Noise level
Use on 3/4 and 1/2 load: section D	Use on 3/4 and 1/2 load: section D	$M_N = \frac{60 \times P_N}{2\pi\ N_N}$	section D

PLS
Drip-proof 3-phase induction motors
Electrical characteristics

E1 - Selection data

		MAINS SUPPLY 380 V 50 Hz				MAINS SUPPLY 415 V 50 Hz					MAINS SUPPLY 460 V can be used from 440V to 480V 60 Hz			
	*Rated power at 50 Hz	Rated speed	Rated current	**Power factor	*** Efficiency	Rated speed	Rated current	**Power factor	*** Efficiency	*Rated power at 60 Hz	Rated speed	Rated current	**Power factor	*** Efficiency
Type	P_N kW	N_N min^{-1}	I_N A	Cos φ	η	N_N min^{-1}	I_N A	Cos φ	η	P_N kW	N_N min^{-1}	I_N A	Cos φ	η
PLS 315 MG	132	730	285	0.76	92.5	735	268	0.74	92.5	150	875	266	0.76	96
PLS 315 LG	160	730	346	0.76	92.5	735	325	0.74	92.5	180	875	320	0.76	93
PLS 315 LG	180	730	387	0.76	93	735	364	0.74	93	200	875	351	0.76	94
PLS 315 VLG	200	730	430	0.76	93	735	404	0.74	93	230	875	404	0.76	94
PLS 355 LA	285	738	553	0.82	95.5	740	526	0.79	95.5	320	880	513	0.82	95.5
PLS 355 LB	330	738	640	0.82	95.5	740	609	0.79	95.5	375	880	601	0.82	95.5
PLS 400 LA	375	738	719	0.83	95.5	740	683	0.80	95.5	430	880	681	0.83	95.5
PLS 400 LB	450	738	863	0.83	95.5	740	819	0.80	95.5	500	880	792	0.83	95.5

* Power ratings higher than 450 kW can be ordered. Please consult Leroy-Somer.

PLS
Drip-proof 3-phase induction motors

E

PLS
Drip-proof 3-phase induction motors
Dimensions

PAGES

F1 - Foot-mounted 48

IM B3 (IM 1001)

F2 - Foot and flange-mounted 50

IM B5 (IM 3001)
IM V1 (IM 3011)
IM B35 (IM 2001)

F

PLS
Drip-proof 3-phase induction motors
Dimensions

F1 - Foot-mounted

Dimensions in millimetres

Dimensions of PLS drip-proof 3-phase induction motors - IP 23
Cage rotor

- foot-mounted - IM B3 (IM 1001)

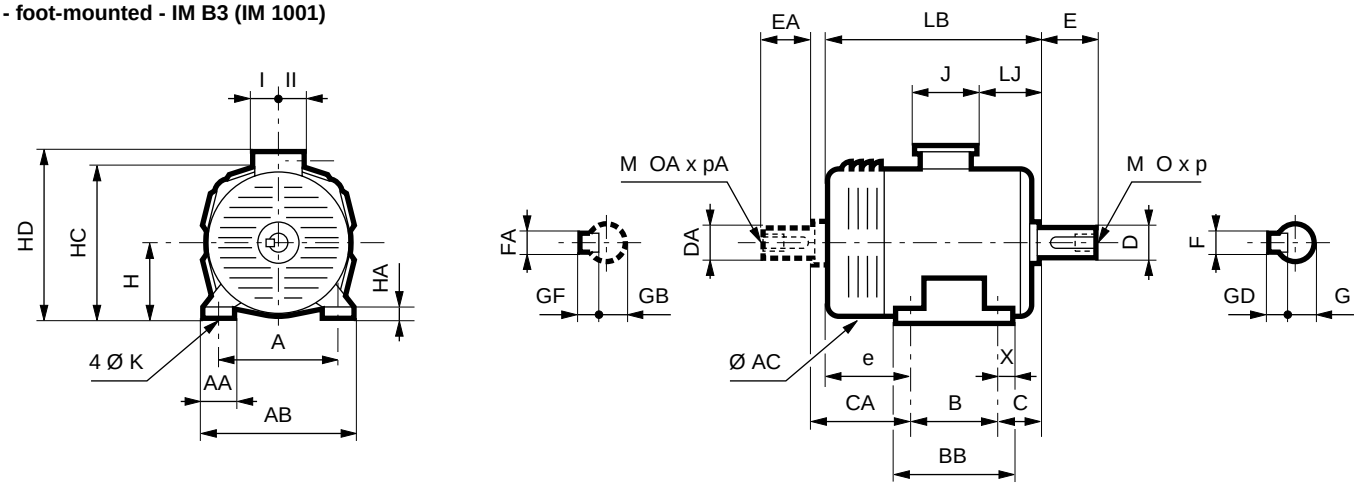

Type	Main shaft extensions													
	4, 6 and 8 poles							2 and 2/4 poles						
	F	GD	D	G	E	O	p	F	GD	D	G	E	O	p
PLS 160 M	14	9	48k6	42.5	110	16	36	14	9	48k6	42.5	110	16	36
PLS 160 MG/L	14	9	48k6	42.5	110	16	36	14	9	48k6	42.5	110	16	36
PLS 180 M/L	16	10	55m6	49	110	20	42	16	10	55m6	49	110	20	42
PLS 180 LG	16	10	55m6	49	110	20	42	16	10	55m6	49	110	20	42
PLS 200 M/LP	18	11	60m6	53	140	20	42	18	11	60m6	53	140	20	42
PLS 200 L	18	11	60m6	53	140	20	42	18	11	60m6	53	140	20	42
PLS 225 MR/MU	18	11	65m6	58	140	20	42	18	11	60m6	53	140	20	42
PLS 250 SP/MP	20	12	75m6	67.5	140	20	42	18	11	65m6	58	140	20	42
PLS 280 SC/MC/MD	22	14	80m6	71	170	20	42	18	11	65m6	58	140	20	42
PLS 315 S/SU/M/MU/L	25	14	90m6	81	170	24	50	20	12	70m6	62.5	140	20	42
PLS 315 LD	28	16	100m6	90	210	24	50	22	14	80m6	71	170	20	42
PLS 315 MG/LG/VLG/VLGU	28	16	100m6	90	210	24	50	22	14	80m6	71	170	20	42
PLS 355 L	28	16	110m6	100	210	24	50	22	14	80m6	71	170	20	42
PLS 400 L	32	18	120m6	109	210	24	50	-	-	-	-	-	-	-

Type	Secondary shaft extensions													
	4, 6 and 8 poles							2 and 2/4 poles						
	FA	GF	DA	GB	EA	OA	pA	FA	GF	DA	GB	EA	OA	pA
PLS 160 M	10	8	38k6	33	80	12	28	10	8	38k6	33	80	12	28
PLS 160 MG/L	14	9	48k6	42.5	110	16	36	14	9	48k6	42.5	110	16	36
PLS 180 M/L	14	9	48k6	42.5	110	16	36	14	9	48k6	42.5	110	16	36
PLS 180 LG	16	10	55m6	49	110	20	42	16	10	55m6	49	110	20	42
PLS 200 M/LP	16	10	55m6	49	110	20	42	16	10	55m6	49	110	20	42
PLS 200 L	18	11	60m6	53	140	20	42	18	11	60m6	53	140	20	42
PLS 225 MR/MU	18	11	65m6	58	140	20	42	18	11	60m6	53	140	20	42
PLS 250 SP/MP	18	11	65m6	58	140	20	42	18	11	65m6	58	140	20	42
PLS 280 SC/MC/MD	18	11	65m6	58	140	20	42	18	11	65m6	58	140	20	42
PLS 315 S/SU/M/MU/L	20	12	75m6	67.5	140	20	42	20	12	70m6	62.5	140	20	42
PLS 315 LD	20	12	75m6	67.5	140	20	42	20	12	70m6	62.5	140	20	42
PLS 315 MG/LG/VLG/VLGU	22	14	80m6	71	170	20	42	22	14	80m6	71	170	20	42
PLS 355 L	28	16	110m6	100	210	24	50	22	14	80m6	71	170	20	42
PLS 400 L	32	18	120m6	109	210	24	50	-	-	-	-	-	-	-

PLS
Drip-proof 3-phase induction motors
Dimensions

F1 - Foot-mounted

Dimensions in millimetres

Dimensions of PLS drip-proof 3-phase induction motors - IP 23
Cage rotor

- foot-mounted - IM B3 (IM 1001)

Type	Main dimensions																			
	A	AB	B	BB	C	X	AA	K	HA	e	H	AC	HD	HC	LB	LJ	J	I	II	CA
PLS 160 M	254	294	210	245	108	20	45	14	20	147	160	295	367	308	465	142	124	70	70	154
PLS 160 MG	254	294	210	298	108	22	44	14	24	180	160	343	407	332	498	118	205	100	95	187
PLS 160 L	254	294	254	298	108	22	44	14	24	136	160	343	407	332	498	118	205	100	95	143
PLS 180 M	279	324	241	319	121	20	68	14	30	136	180	343	427	352	498	118	205	100	95	143
PLS 180 L	279	324	279	319	121	20	68	14	30	123	180	343	427	352	523	118	205	100	95	130
PLS 180 LG	279	344	279	323	121	22	60	14	30	180	180	387	450	374	580	168	205	100	95	190
PLS 200 M	318	378	267	347	133	20	60	19	30	230	200	387	470	394	630	168	205	100	95	240
PLS 200 LP	318	378	305	347	133	20	60	19	30	192	200	387	470	394	630	168	205	100	95	202
PLS 200 L	318	378	305	345	133	20	60	19	32	215	200	437	520	419	653	198	217	103	145	227
PLS 225 MU	356	416	311	351	149	20	60	19	32	233	225	437	545	444	693	198	217	103	145	245
PLS 225 MR	356	416	311	351	149	20	60	19	32	248	225	437	545	444	708	198	217	103	145	260
PLS 250 SP	406	470	311	400	168	26	94	24	40	300	250	490	643	495	779	158	292	148	180	310
PLS 250 MP	406	470	349	400	168	26	94	24	40	262	250	490	643	505	779	158	292	148	180	272
PLS 280 SC	457	517	368	467	190	24	60	24	26	266	280	490	684	524	824	209	292	148	180	276
PLS 280 MC	457	517	419	467	190	24	60	24	26	215	280	490	684	524	824	209	292	148	180	225
PLS 280 MD	457	517	419	467	190	24	60	24	26	295	280	490	684	524	904	209	292	148	180	305
PLS 315 S	508	608	406	486	216	40	100	28	26	258	315	600	776	615	880	305	292	148	180	271
PLS 315 SU	508	608	406	486	216	40	100	28	26	318	315	600	776	615	940	305	292	148	180	331
PLS 315 M	508	608	457	537	216	40	100	28	26	267	315	600	776	615	940	305	292	148	180	280
PLS 315 MU	508	608	457	537	216	40	100	28	26	352	315	600	776	615	1025	305	292	148	180	365
PLS 315 L	508	608	508	588	216	40	100	28	26	301	315	600	776	615	1025	305	292	148	180	314
PLS 315 LD	508	608	508	588	216	40	100	28	26	361	315	600	865	615	1085	241	420	180	235	374
PLS 315 MG	508	608	457	537	216	40	100	27	26	378	315	660	890	650	1051	248	428	205	195	393
PLS 315 LG	508	608	508	588	216	40	100	27	26	407	315	660	890	650	1131	248	428	205	195	422
PLS 315 VLG	508	608	560	640	216	40	100	27	26	415	315	660	890	650	1191	248	428	205	195	430
PLS 315 VLGU	508	608	560	640	216	40	100	27	26	485	315	660	890	650	1261	248	428	205	195	500
PLS 355 L	610	710	630	710	254	30	100	27	26	586	355	705	1078	710	1470	130	700	224	396	596
PLS 400 L	686	806	710	800	280	45	80	35	26	765	400	795	1173	800	1755	177	700	224	396	775

PLS
Drip-proof 3-phase induction motors
Dimensions

F2 - Foot and flange-mounted

Dimensions in millimetres

Dimensions of PLS drip-proof 3-phase induction motors - IP 23
Cage rotor

- (FF) foot and flange-mounted - IM B5 (IM 3001)* - IM V1 (IM 3011)

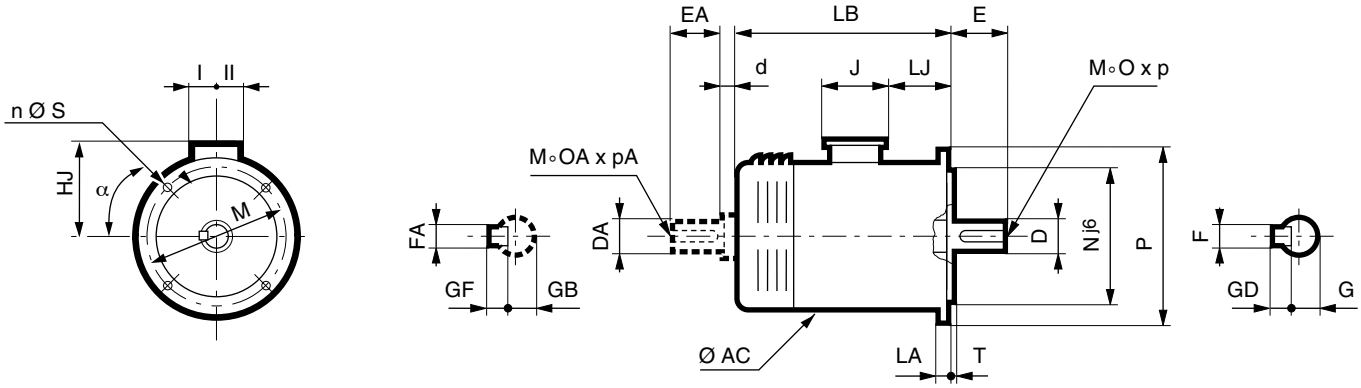

- (FF) foot and flange-mounted - IM B35 (IM 2001)

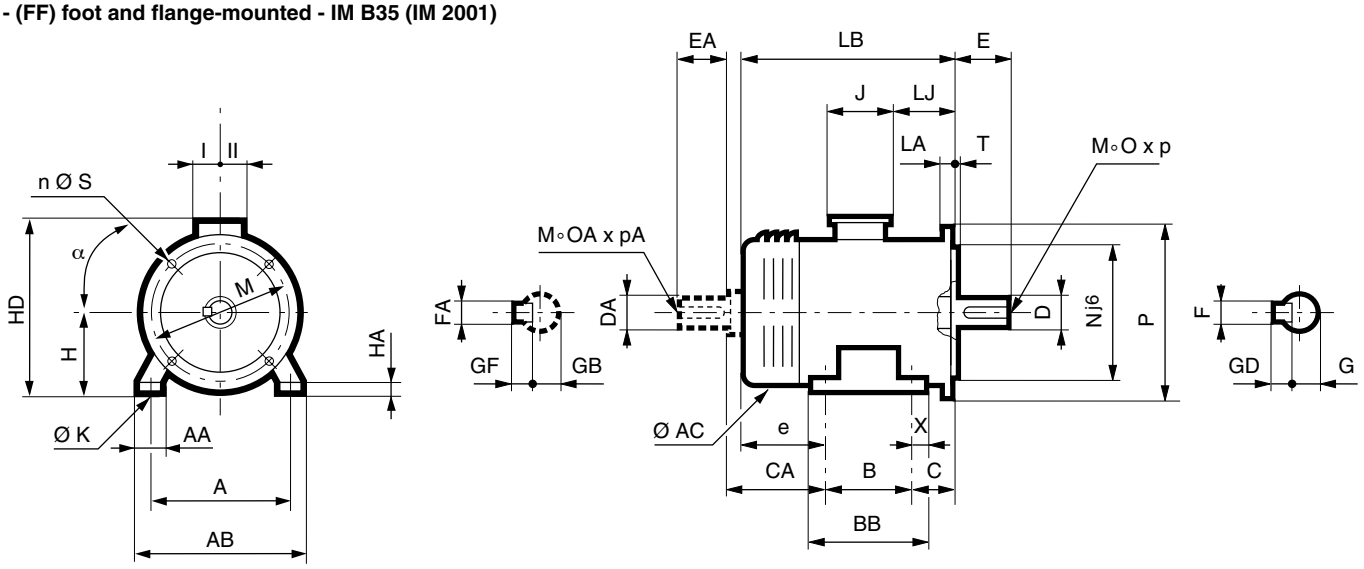

Dimension CA and shaft extensions are identical to those for foot-mounted motors

* For frame size ≥ 250 mm used as IM B5 (IM 3001), please consult Leroy Somer.

PLS
Drip-proof 3-phase induction motors
Dimensions

F2 - Foot and flange-mounted

Dimensions in millimetres

Dimensions of PLS drip-proof 3-phase induction motors - IP 23
Cage rotor

- (FF) flange-mounted **- foot and flange-mounted (FF)**

Type	Main dimensions																				IEC Sym.
	A	AB	B	BB	C	X	AA	K	HA	e	H	AC	HD	HJ	LB	LJ	J	I	II	CA	
PLS 160 M	254	294	210	245	108	20	45	14	20	147	160	295	367	207	465	142	124	70	70	154	FF350
PLS 160 MG	254	294	210	298	108	22	44	14	24	180	160	343	407	247	498	118	205	100	95	187	FF350
PLS 160 L	254	294	254	298	108	22	44	14	24	136	160	343	407	247	498	118	205	100	95	143	FF350
PLS 180 M	279	324	241	319	121	20	68	14	30	136	180	343	427	247	498	118	205	100	95	143	FF350
PLS 180 L	279	324	279	319	121	20	68	14	30	123	180	343	427	247	523	118	205	100	95	130	FF350
PLS 180 LG	279	344	279	323	121	22	60	14	30	180	180	387	450	270	580	168	205	100	95	190	FF350
PLS 200 M	318	378	267	347	133	20	60	19	30	230	200	387	470	270	630	168	205	100	95	240	FF400
PLS 200 LP	318	378	305	347	133	20	60	19	30	192	200	387	470	270	630	168	205	100	95	202	FF400
PLS 200 L	318	378	305	345	133	20	60	19	32	215	200	437	520	320	653	198	217	103	145	227	FF400
PLS 225 MU	356	416	311	351	149	20	60	19	32	233	225	437	545	320	693	198	217	103	145	245	FF500
PLS 225 MR	356	416	311	351	149	20	60	19	32	248	225	437	545	320	708	198	217	103	145	260	FF500
PLS 250 SP	406	470	311	400	168	26	94	24	40	300	250	490	643	393	779	158	292	148	180	310	FF600
PLS 250 MP	406	470	349	400	168	26	94	24	40	262	250	490	643	393	779	158	292	148	180	272	FF600
PLS 280 SC	457	517	368	467	190	24	60	24	26	266	280	490	684	404	824	209	292	148	180	276	FF600
PLS 280 MC	457	517	419	467	190	24	60	24	26	215	280	490	684	404	824	209	292	148	180	225	FF600
PLS 280 MD	457	517	419	467	190	24	60	24	26	295	280	490	684	404	904	209	292	148	180	305	FF600
PLS 315 S	508	608	406	486	216	40	100	28	26	258	315	600	776	455	880	305	292	148	180	271	FF740
PLS 315 SU	508	608	406	486	216	40	100	28	26	318	315	600	776	455	940	305	292	148	180	331	FF740
PLS 315 M	508	608	457	537	216	40	100	28	26	267	315	600	776	455	940	305	292	148	180	280	FF740
PLS 315 MU	508	608	457	537	216	40	100	28	26	352	315	600	776	455	1025	305	292	148	180	365	FF740
PLS 315 L	508	608	508	588	216	40	100	28	26	301	315	600	776	455	1025	305	292	148	180	314	FF740
PLS 315 LD	508	608	508	588	216	40	100	28	26	361	315	600	865	455	1085	241	420	180	235	374	FF740
PLS 315 MG	508	608	457	537	216	40	100	27	26	378	315	660	890	575	1051	248	428	205	195	393	FF740
PLS 315 LG	508	608	508	588	216	40	100	27	26	407	315	660	890	575	1131	248	428	205	195	422	FF740
PLS 315 VLG	508	608	560	640	216	40	100	27	26	415	315	660	890	575	1191	248	428	205	195	430	FF740
PLS 315 VLGU	508	608	560	640	216	40	100	27	26	485	315	660	890	575	1261	248	428	205	195	500	FF740
PLS 355 L	610	710	630	710	254	30	100	27	26	586	355	705	1078	723	1470	130	700	224	396	596	FF940
PLS 400 L	686	806	710	800	280	45	80	35	26	765	400	795	1173	773	1755	177	700	224	396	775	FF940

For frame size ≥ 250 mm used as IM B5 (IM 3001), please consult Leroy Somer.

IEC Symbol	Standard flange dimensions							
	M	N	P	T	n	S	LA	α
FF 350	350	300	400	5	4	19	15	45°
FF 400	400	350	450	5	8	19	16	22°30
FF 500	500	450	550	5	8	19	18	22°30
FF 600	600	550	660	6	8	24	22	22°30
FF 740	740	680	800	6	8	24	25	22°30
FF 940	940	880	1000	6	8	28	28	22°30
FF 1080	1080	1000	1150	6	8	28	30	22°30

PLS
Drip-proof 3-phase induction motors
Optional features

G1 - Electrical options

G1.1 - THERMAL PROTECTION

These protection devices provide total protection of the motor against non-transient overloads. If a shorter reaction time is required, if you want to detect transient overloads, or if you wish to monitor temperature rises at "hot spots" in the motor or at strategic points in the installation for maintenance purposes, it would be advisable to install heat sensors. The various types are shown in the table below, with a description of each. It must be emphasized that sensors cannot be used to carry out direct adjustments to the motor operating cycles.

Built-in indirect thermal protection

Type	Symbol	Operating principle	Operating curve	Cut-off	Protection provided	Number of devices
Normally closed thermostat (closed when de-energized)	PTO	Bimetallic strip, indirectly heated, with normally closed (NC) contact	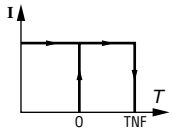	2.5 A at 250V with Cos φ 0.4	General surveillance for non-transient overloads	2 or 3 in series
Normally open thermostat (open when de-energized)	PTF	Bimetallic strip, indirectly heated, with normally open (NO) contact	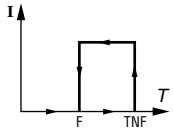	2.5 A at 250V with Cos φ 0.4	General surveillance for non-transient overloads	2 or 3 in parallel
Positive temperature cœfficient thermistor	PTC	Variable non-linear resistor with indirect heating	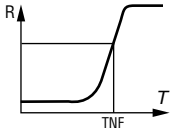	0	General surveillance for transient overloads	3 in series
Thermocouples	*T* (*T*<150°C) Copper Constantan K (*T*<1000°C) Copper Copper-Nickel	Peltier effect	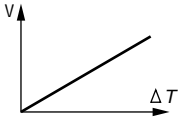	0	Continuous surveillance at hot spots	1 per hot spot
Platinum resistance thermometer	PT 100	Variable linear resistor with indirect heating	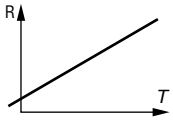	0	High accuracy continuous surveillance at key hot spots	1 per hot spot

- NRT: nominal running temperature
- The NRTs are chosen according to the position of the sensor in the motor and the temperature class.

Fitting thermal protection

- PTO or PTF, in the control circuits
- PTC, with relay, in the control circuits
- PT 100 or Thermocouples, with reading equipment or recorder, in the control board of the installation for continuous surveillance.

Alarm and Safety

All protective equipment may be backed up by another type of protection (with different NRTs): the first device will then act as an alarm (light or sound signals given without shutting down the power circuits), and the second device will be the safety system (shutting down the power circuits).

PLS
Drip-proof 3-phase induction motors
Optional features

G1 - Electrical options

G1.2 - SPACE HEATERS

Severe climatic conditions may require the use of space heaters (fitted to the motor windings) which serve to maintain the average temperature of the motor, provide trouble-free starting, and eliminate problems caused by condensation (loss of insulation).

The heater supply wires are brought out to a domino or terminal block in the motor terminal box. The heaters must be switched off while the motor is running. They must only be switched on when the motor is cold and stationary.

Motor type	No. of poles	Heater type	Number and power P(W)
PLS 160	2 - 4 - 6	ACM 1	2 x 25
PLS 180 to PLS 200	2 4 - 6	ACM 1 ACM 4	1 x 25 2 x 25
PLS 225 and PLS 250	2 4 - 6	ACM 4 ACM 5	2 x 25 2 x 40
PLS 280 and PLS 315 S/SU/M/MU/L/LD	2 4 - 6	ACM 5 ACM 6	2 x 40 2 x 50
PLS 315 MG/LG/VLG/VLGU	2 - 4 - 6 - 8	-	2 x 50
PLS 355 and PLS 400	2 - 4 - 6 - 8	-	4 x 50

The space heaters use 220/240V, single phase, 50 or 60 Hz.

G2 - Mechanical options - Non-standard flanges

Optionally, LEROY-SOMER motors can be fitted with flanges and faceplates that are larger or smaller than standard. This means that motors can be adapted to all types of situation without the need for costly and time-consuming modifications.

The table below gives flange-motor compatibility.

The bearing and shaft extension for each frame size remain standard.

(FF) Flange-mounted

Motor type \ Flange type	FF 300	FF 350	FF 400	FF 500	FF 600	FF 740	FF 940	FF 1080
PLS 160	✶	●						
PLS 180	✶	●	✶					
PLS 200		✶	●	✶				
PLS 225			✶	●				
PLS 250				✶	●			
PLS 280				✶	●			
PLS 315					✶	●		
PLS 355						✶	●	
PLS 400							●	✶

● Standard

✶ Adaptable without shaft modification

G

PLS
Drip-proof 3-phase induction motors
Maintenance

H1 - Identification - Nameplates

NAMEPLATES

* LEROY SOMER Mot. 3 ∿ PLS 180 M-T CE
N° 734570 GD 002 kg 102

IP 23 IK08	I cl.F	40°C	S1	%	c/h
V	Hz	min -1	kW	cos φ	A
Δ 380	50	2928	30	0.88	57.6
Δ 400		2936		0.84	57.2
Y 690		2936		0.84	33
Δ 415		2942		0.81	57.3
Δ 440	60	3537	34	0.88	54.3
Δ 460		3542		0.87	54.2

DE	6212 2RSC3	g
NDE	6210 2RSC3	h

* LEROY SOMER MOT. 3 ∿ PLS 315 L CE
N° 703 932 00 GF 01 kg 790

IP23 IK08	I cl.F	40°C	S1	%	c/h
V	Hz	min-1	kW	cos φ	A
Δ 380	50	2970	250	0.92	434
Δ 400		2974		0.90	422
Y 690		2974		0.90	244
Δ 415		2976		0.88	415
Δ 440	60	3568	288	0.92	418
Δ 460		3572		0.91	417

DE	6316 C3	035 g	ESSO UNIREX N3
NDE	6316 C3	2900 h	

*Other logos may be used as an option :
but only by agreement BEFORE ordering.

▼ ***Definition of symbols used on nameplates***

CE **Legal mark of conformity of product to the requirements of European Directives.**

MOT 3 ~	: Three-phase A.C. motor
PLS	: Series
180	: Frame size
M	: Housing symbol
T	: Impregnation index

Motor no.

734570	: Serial number
G	: Year of production
D	: Month of production
002	: Batch number
70393200	: Serial number
G	: Year of production
F	: Month of production
01	: Batch number

kg	: Weight
IP23 IK08	: Index of protection
I cl. F	: Insulation class F
40 °C	: Contractual ambient operating temperature (IEC 60034-1)
S	: Duty
%	: Operating factor
c/h	: Number of cycles per hour
V	: Supply voltage
Hz	: Supply frequency
min-1	: Revolutions per minute (rpm)
kW	: Rated output power
cos φ	: Power factor
A	: Rated current
Δ	: Delta connection
Y	: Star connection

Bearings

DE	: "Drive end" Drive end bearing
NDE	: "Non drive end" Non drive end bearing
g	: Quantity of grease at each regreasing (in g)
h	: Regreasing interval (in hours)
UNIREX N3	: Type of grease

Please quote when ordering spare parts

H2 - Cross-sectional views and parts list

H2.1 - FRAME SIZES: 160 M / MG / L
180 M / L

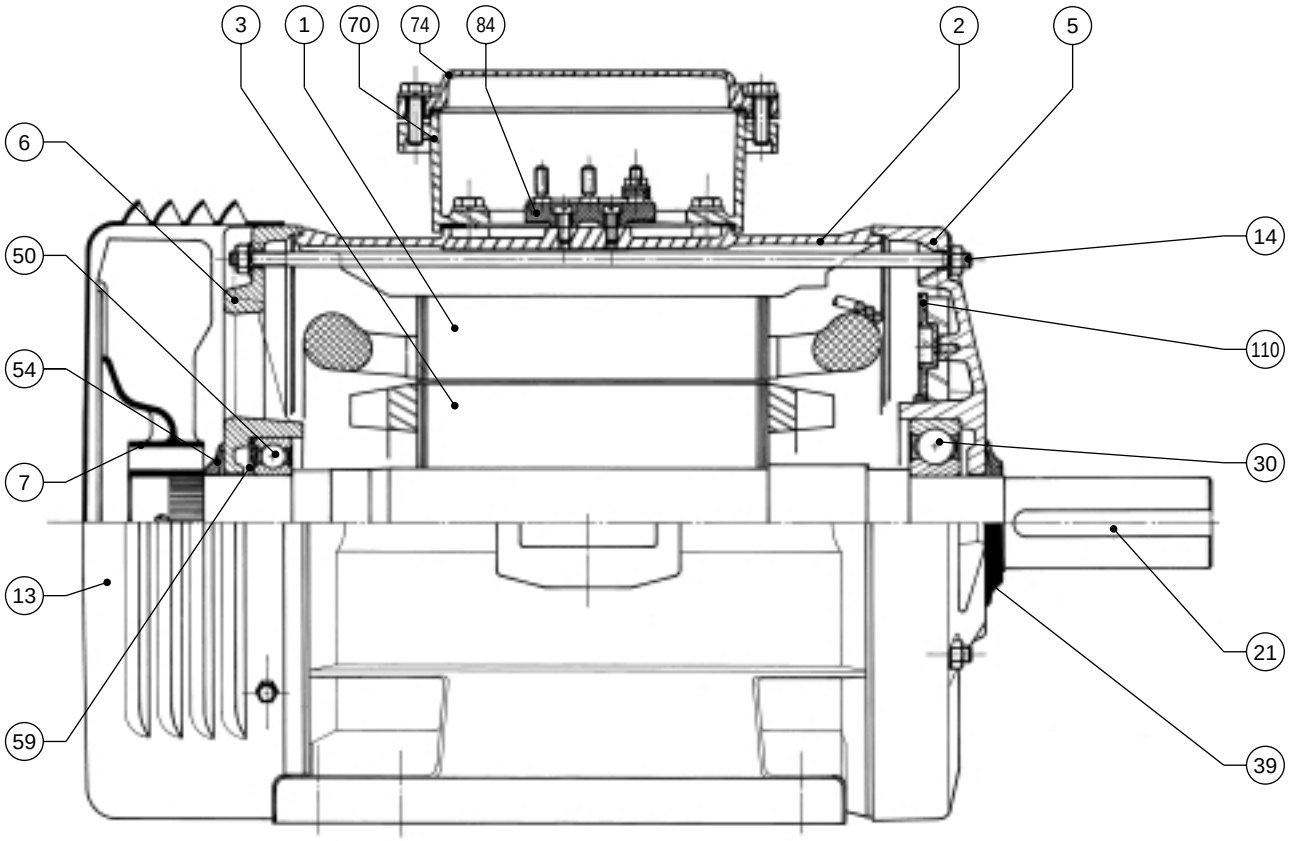

No.	Description	No.	Description	No.	Description
1	Wound stator	13	Fan cover	54	Non drive end seal
2	Frame	14	Tie rods	59	Preloading (wavy) washer
3	Rotor	21	Key	70	Terminal box
5	DE shield	30	Drive end bearing	74	Terminal box lid
6	NDE shield	39	Drive end seal	84	Terminal blocks
7	Fan	50	Non drive end bearing	110	Protective grille

H2 - Cross-sectional views and parts list

H2.2 - FRAME SIZES: 180 LG
200 M / L / LP
225 MR / MU

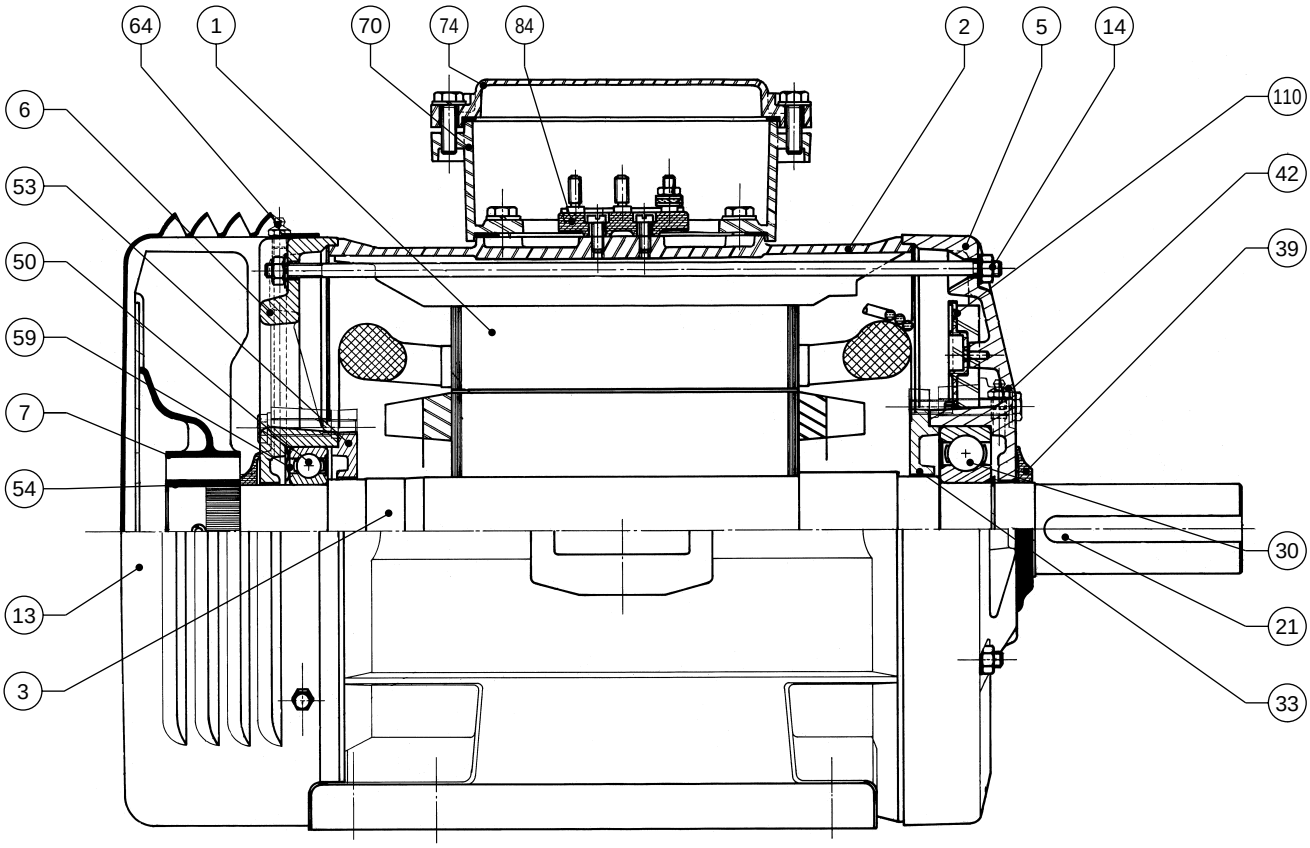

H

No.	Description	No.	Description	No.	Description
1	Wound stator	21	Key	59	Preloading (wavy) washer
2	Frame	30	Drive end bearing	64	Grease nipple
3	Rotor	33	Inner DE bearing retainer	70	Terminal box
5	DE shield	39	Drive end seal	74	Terminal box lid
6	NDE shield	42	Grease nipple	84	Terminal blocks
7	Fan	50	Non drive end bearing	110	Protective grille
13	Fan cover	53	Inner NDE bearing retainer		
14	Tie rods	54	Non drive end seal		

H2 - Cross-sectional views and parts list

H2.3 - FRAME SIZES: 250
280

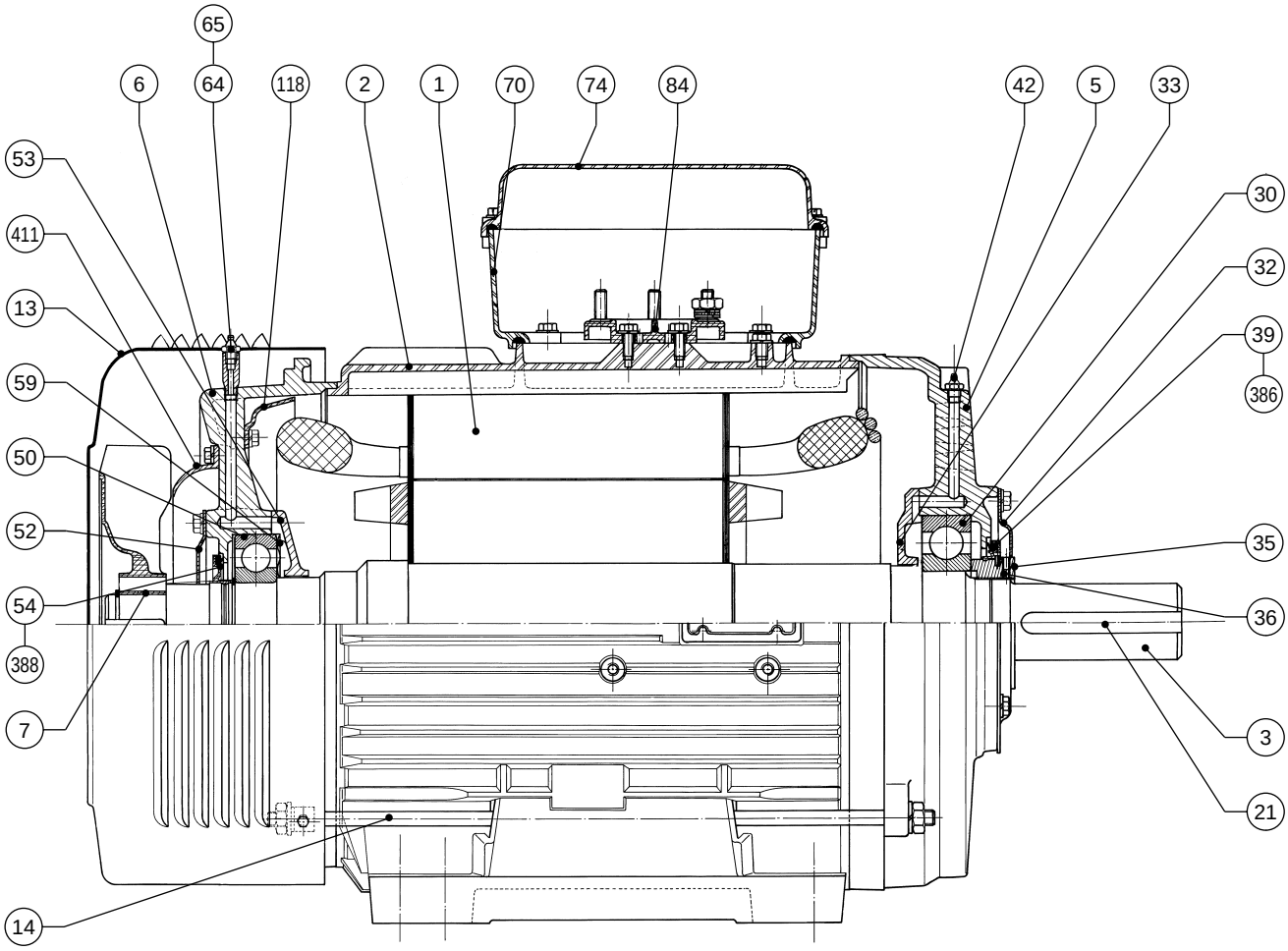

No.	Description	No.	Description	No.	Description
1	Wound stator	**32**	DE external cover	**64**	Grease nipple
2	Frame	**33**	Inner DE bearing retainer	**65**	Extension for grease nipple
3	Rotor	**35**	DE mobile grease valve	**70**	Terminal box
5	DE shield	**39**	Drive end seal	**74**	Terminal box lid
6	NDE shield	**42**	Grease nipple	**84**	Terminal blocks
7	Fan	**50**	Non drive end bearing	**118**	Internal deflector
13	Fan cover	**52**	Outer NDE bearing retainer	**386**	DE seal support
14	Tie rods	**53**	Inner NDE bearing retainer	**388**	NDE seal support
21	Key	**54**	Non drive end seal	**411**	External deflector
30	Drive end bearing	**59**	Preloading (wavy) washer		

H2 - Cross-sectional views and parts list

H2.4 - FRAME SIZES: 315

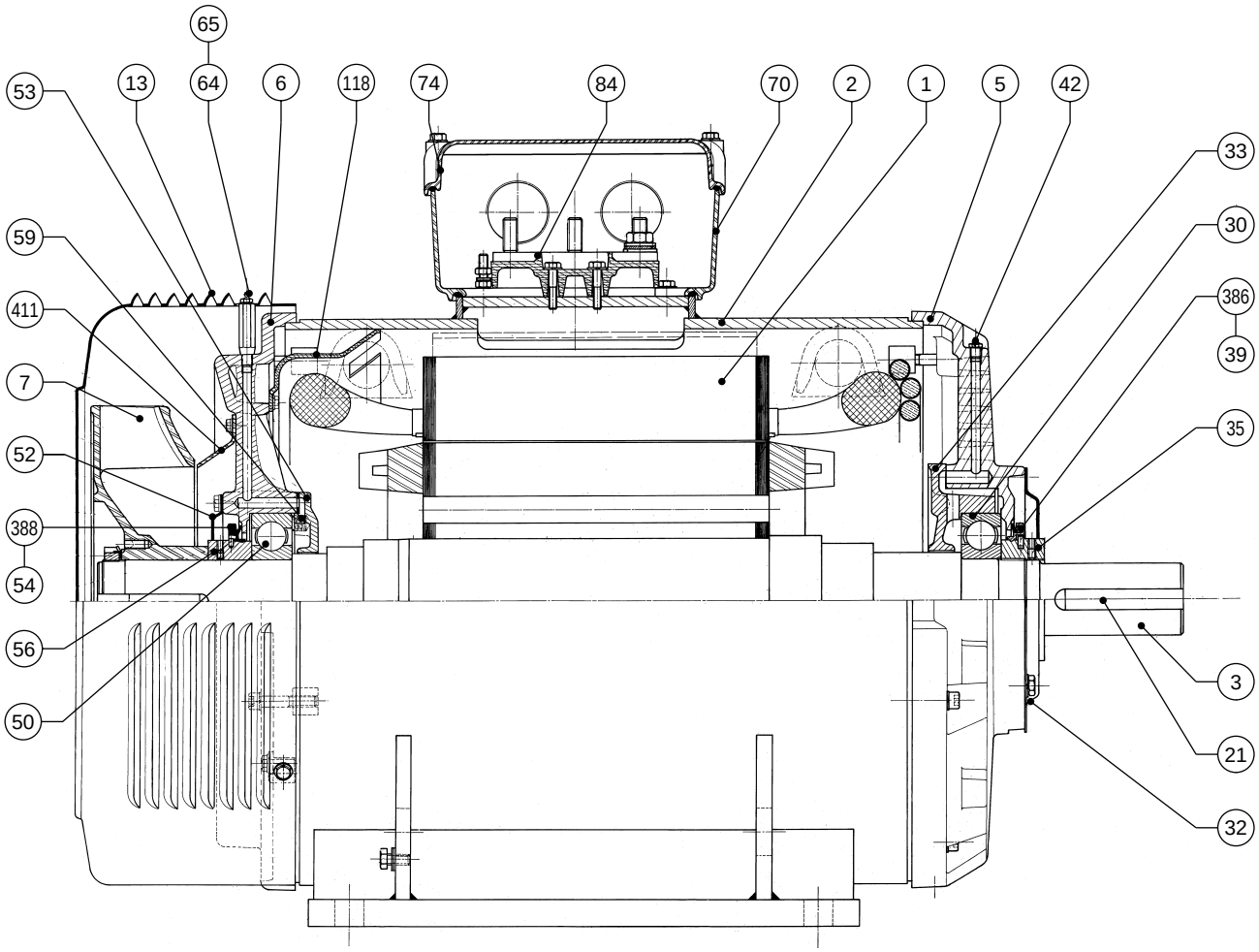

No.	Description	No.	Description	No.	Description
1	Wound stator	33	Inner DE bearing retainer	64	Grease nipple
2	Frame	35	DE mobile grease valve	65	Extension for grease nipple
3	Rotor	39	Drive end seal	70	Terminal box
5	DE shield	42	Grease nipple	74	Terminal box lid
6	NDE shield	50	Non drive end bearing	84	Terminal blocks
7	Fan	52	Outer NDE bearing retainer	118	Internal deflector
13	Fan cover	53	Inner NDE bearing retainer	386	DE seal support
21	Key	54	Non drive end seal	388	NDE seal support
30	Drive end bearing	56	NDE mobile grease valve	411	External deflector
32	DE external cover	59	Preloading (wavy) washer		

H2 - Cross-sectional views and parts list

H2.5 - FRAME SIZES: 355
400

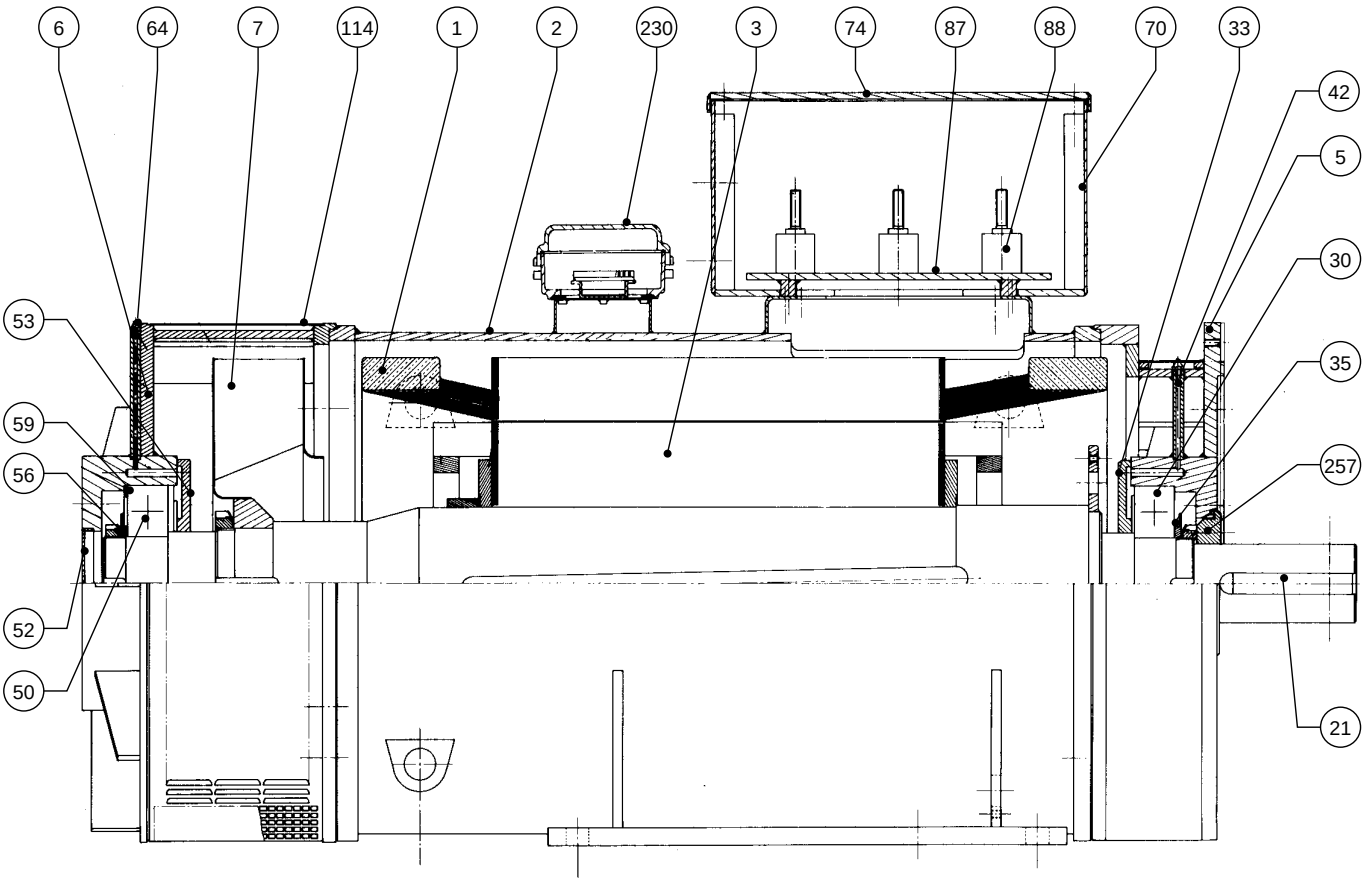

No.	Description	No.	Description	No.	Description
1	Wound stator	**33**	DE internal cover (front)	**64**	NDE grease nipple (rear)
2	Housing	**35**	Moving part of DE grease valve (front)	**70**	Stator terminal box
3	Rotor	**42**	DE grease nipple (front)	**74**	Stator terminal box lid
5	Drive end shield (DE)	**50**	NDE bearing (rear)	**87**	Isolator support
6	Non-drive end shield (NDE)	**52**	Outer NDE bearing retainer (rear)	**88**	Isolators
7	Fan	**53**	Inner NDE bearing retainer (rear)	**114**	NDE end shield cover band (rear)
21	Shaft extension key	**56**	Moving part of NDE grease valve (rear)	**230**	Cast iron terminal box for isotherms
30	Drive end bearing	**59**	NDE preloading (wavy) washer	**257**	Labyrinth seal

Notes

Notes

Notes

Notes

I - APPLICATION AREA
Acceptance of our tenders or the placing of any order with us implies acceptance of the following conditions without exception or reservation. These conditions of sale shall prevail over all stipulations appearing on the customer's purchase order, his general conditions of purchase or any other document emanating from him and / or a third party.
A dispensation from these General Conditions of Sale applies to sales concerning foundry parts, which are subject to the European Foundries General Conditions of Sale, latest edition.

II - ORDERS
All orders, including those taken by our agents and representatives, by whatever mode of transmission, become valid only after we have accepted them in writing.
We reserve the right to modify the characteristics of our goods without prior warning. However, the customer reserves the possibility to specify technical specifications in the order. Unless such requirements have been notified in writing, the customer will not be able to refuse delivery of new modified goods.
Our company will not accept responsibility for an incorrect choice of goods if this incorrect choice results from incomplete and / or erroneous conditions of use, or conditions that have not been conveyed to the vendor by the customer.
Unless otherwise specified, our tenders and estimates are only valid for thirty days from the date of issue.
When the goods have to satisfy standards, particular regulations and / or be inspected by standards or control organisations, the price request must be accompanied by full specifications with which we must comply with. This is mentioned in the estimate. All test and inspection fees are the customer's responsibility.

III - PRICE
Our prices and price lists are shown exclusive of tax and may be revised without prior notice.
Our prices are either firm for the duration specified on the estimate, or subject to revision according to a formula accompanying the tender which, depending on the regulations, covers a change in the cost of raw materials, products, various services and salaries, an index of which is published in the B.O.C.C.R.F. ("Bulletin Officiel de la Concurrence, de la Consommation et de la Répression des Fraudes").
For any order of goods not found in our catalogue, requiring special manufacture, the invoice will include a minimum fixed sum of 600 FRF (six hundred French Francs) exclusive of tax, to cover start - up costs. Any tax due will be charged to the customer.
All related costs, such as customs clearance and special inspections, will be added on.
Customers should remember that the French Franc (or other currency) is being replaced by the Single European Currency (EURO) according to a European Community ruling. In accordance with the general principles of monetary law, references to the French Franc will then as of right be considered to refer to the Euro. This substitution will be enforced on the date and in accordance with the conditions defined by the European Community ruling.

IV - DELIVERY
Our export sales are governed by the INCOTERMS published by the International Chamber of Commerce ("I.C.C. INCOTERMS"), latest edition.
Goods are despatched in accordance with the conditions indicated on our order acknowledgement, sent out in response to any order for goods and / or services.
Unless otherwise specified, our prices refer to goods put at customer's disposal in our factories, and include standard packaging.
Unless otherwise specified, goods are always transported at the consignee's risk. Without exception, it is up to the purchaser to raise with the transporter, in the legal form and time limits, any claim concerning the condition or the number of packages received and also to send us at the same time a copy of this declaration. Failure to respect this procedure will relieve us of all responsibility.
In the case of CIF (Cost, Insurance & Freight) or CIP (Carriage & Insurance Paid to) sales, etc…, in the event of damage, our responsibility will only be engaged if any reservations and required declarations have been notified in the required time period, and will not in any case exceed the indemnity sum received from our insurers.
If the arrangements for despatch are modified, we reserve the right to invoice any additional costs arising from such changes. Packages cannot be returned.
Should the delivery of goods be delayed for a reason not attributable to the vendor, goods will be stored on the vendor's premises, at the own risk of the customer, at a charge for storage of 1% (one per cent) of the total order sum per week, beginning, without a grace period, on the day after the scheduled date of delivery indicated in the contract. After thirty days from this date, the vendor has the right to dispose of these goods as he wishes and arrange a new delivery date for the said goods with the customer. In all instances, all down payments received remain the property of the vendor as indemnity, without prejudice to other claims for damages that the vendor may wish to bring.

V - DELIVERY DATES
Delivery times are stated for information only, and do not include the month of August.
Delivery dates are counted from the issue date of the order acknowledgement from the vendor and are subject to compliance with the provisions indicated on the order acknowledgement, notably receipt of the down payment for the order, notification of the issuance of an irrevocable letter of credit conforming to all vendor requirements (especially as regards the amount, currency, validity, licence, etc.) and acceptance of the terms of payment with any guarantees which may be required, etc…
In no case does late delivery automatically entitle the customer to damages and / or penalties.
Unless otherwise specified, we reserve the right to make partial deliveries.
Delivery dates are automatically suspended without formal notice, and the vendor shall have no responsibility in cases of Force Majeure, or events beyond the control of the vendor or his suppliers such as delays, saturation, or unavailability of the planned transport methods, energy, raw materials etc., serious accidents such as fires, explosions, strikes, lock out, or emergency measures taken by the Authorities occurring after the conclusion of the order and preventing its normal execution. Similarly, delivery dates are automatically suspended without formal notice in all cases of failure to perform or late payment by the customer.

VI - TESTS
All goods manufactured by the vendor are tested before leaving the factory in accordance with vendor's ISO 9001 certifications. Customers may attend these tests : they simply have to convey the wish to do so in writing when the order is placed.
Specific tests and acceptance tests requested by the customer, whether conducted on the customer's premises, in our factories, on-site, or by inspection organisations, must be noted on the order and are to be paid for by the customer.
Goods specially developed for a customer will have to be approved by the latter before any delivery of mass - produced goods, notified by signing and returning to us the Product Approval Schedule reference Q1. T. 034.
In the event of the customer's insistence on delivery without having signed this form beforehand, the goods will then still be considered as prototypes and the customer will assume sole responsibility for using it or supplying it to his own customers.

VII -TERMS OF PAYMENT
All our sales are considered as carried out and payable at the registered office of the vendor, without exception, whatever the method of payment, the place of conclusion of the sale and delivery.
When the customer is based in France, our invoices are payable on receipt in cash, by banker's draft, or by L.C.R. ("Lettre de Change - Relevé"), within thirty days from the end of the month following the invoice date, net and without discount.
When the customer is based outside France, our invoices are payable in cash against delivery of the dispatching documents or by irrevocable documentary credit confirmed by a first class French bank with all bank charges payable by the customer.
Payments must be made in the currency of the invoice.
In accordance with French Law N° 92.1442 dated December 31,1992, non-payment of an invoice by its due date will give rise, after formal notice, to a penalty equal to one and a half times (1.5) the official rate of interest, and to late payment interest at the bank base rate plus five per cent. If the invoice carries V.A.T. (Value Added Tax), this is calculated on the amount, inclusive of tax, of the remaining sum due and comes into force from the due date.
Should steps have to be taken to recover the said amount, a surcharge of 15% (fifteen per cent) of the sum demanded will be payable.
Moreover, as a consequence of non - payment of an invoice or any term of payment, whatever the method of payment envisaged, the customer shall pay immediately for the whole of the outstanding amount owed to the vendor (including his subsidiaries, sister or parent companies, whether in France or overseas) for all deliveries or services, whatever their initial due date.
Notwithstanding any particular terms of payment arranged between the parties concerned, the vendor reserves the right to demand :

– payment in cash, before the goods leave the factory, for all orders in the process of manufacture, in the event of a problem with payment, or if the customer's financial situation justifies it,
– a down payment for the order.

Unless we are at fault, all down payments are non - returnable, without prejudice to our right to claim damages.
Any payment made in advance of the fixed payment date will lead to a discount of 0.2 % (zero point two per cent) per month of the amount concerned.

VIII - COMPENSATION CLAUSE
Unless prohibited by law, the vendor and the customer expressly agree between one another to compensate their respective debts arising from their commercial relationship, even if the conditions defined by law for legal compensation are not all satisfied.
In applying this clause, by vendor we mean any company in the LEROY SOMER group.

IX - TRANSFER OF RISKS - TRANSFERT OF TITLE
Transfer of risks occurs upon the handing over of the goods, according to the delivery conditions agreed at the time of ordering.
THE TRANSFER OF TITLE OF THE GOODS SOLD TO THE CUSTOMER OCCURS UPON PAYMENT OF THE WHOLE PRINCIPAL SUM AND INTEREST.
The provision of a document creating an obligation to pay (bank draft or similar) does not constitute payment.
So long as the price has not been paid in full, the customer is obliged to inform the vendor, within twenty - four hours, of the seizure, requisition or confiscation of goods to the benefit of a third party, and to take all safety measures to acquaint others with and respect our right of title in the event of intervention by creditors.
Failure to pay the amount due, whether total or partial, on the due date, for whatever reason and on whatever grounds, authorises the vendor to demand as of right and without formal notice, the return of the goods, wherever they may be, at the customer's expense and risk.
Return of the goods does not imply to cancellation of the sale .However, we reserve the option to apply the cancellation clause contained in these General Conditions of Sale.

X - CONFIDENTIALITY
The vendor and the customer undertake to maintain confidentiality of information of a technical, commercial or other nature, obtained during negotiations and / or the execution of any order.

XI - INDUSTRIAL AND INTELLECTUAL PROPERTY RIGHTS
The results, data, studies and information (whether patentable or not), or software developed by the vendor during execution of any order, and delivered to the customer, are the sole property of the vendor.
Apart from the instructions for use, servicing and maintenance, reports and documents of any type that we deliver to our customers remain our property and must be returned to us on request, even when design fees have been charged for them, and they shall not be communicated to third parties or used without the prior written agreement of the vendor.

XII - CANCELLATION CLAUSE
We reserve the right to cancel immediately, as of right and without formal notice, the sale of our goods in case of non-payment of any part of the price by the due date, or in case of any breach in the contractual obligations of the customer. In this case, the goods will have to be returned to us immediately, at the customer's own risk and expense, subject to a penalty of 10% (ten per cent) of its value per week of delay. All payments already received shall remain our property as indemnity, without prejudice to our rights to claim damages.

XIII -WARRANTY
The vendor warrants the goods against any defect, arising from a default in material or in workmanship, for twelve months starting from the date on which they are made available, according to the conditions defined below.

The warranty for goods with special applications, or goods used 24 hours a day, is automatically reduced by half.

On the other hand, parts or accessories of other origin, which bear their own brand name, are included in our warranty only to the extent of the warranty conditions granted by the suppliers of these parts.

The vendor's warranty will only apply insofar as the goods have been stored, used and maintained in accordance with the vendor's instructions and documentation. It cannot be invoked when the default results from :

– failure to monitor, maintain or store the goods correctly,

– normal wear and tear of goods,

– intervention on or modification to the goods without the vendor's prior authorisation in writing,

– abnormal use, or use not conforming to the intended purpose,

– defective installation at the customer's and / or the final user's premises,

– non-communication, by the customer, of the intended purpose or the conditions of use of the goods,

– failure to use original manufacturer's spare parts,

– Force Majeure or any event beyond the control of the vendor,

– etc …

In all cases, the warranty is limited to the replacement or the repair of parts or goods recognised as defective by our technical departments. If the repair is entrusted to a third party, it should only be carried out after acceptance by the vendor of the estimate for repair.

No goods should be returned without the vendor's prior authorisation in writing .

Goods to be repaired should be sent prepaid, to the address indicated by the vendor. If the goods have not been repaired under warranty, the cost of dispatching it back will be invoiced to the customer or to the end purchaser.

This warranty applies to our goods in accessible form and therefore does not cover the cost of dismantling and reinstallation of the said goods in the equipment in which they are integrated .

Repair, modification, or replacement of spare parts or goods during the warranty period will not extend the duration of the warranty.

The provisions of this article constitute the only obligation on the part of the vendor concerning the warranty for the goods supplied.

XIV -LIABILITY
The vendor will be liable for bodily injury caused by his goods or personnel.

The repair of property damages attributable to the vendor is expressly limited to a sum which may not exceed the amount of the goods found as defective.

It is expressly agreed that the vendor and the customer each waive any right to claim for indirect, consequential and / or punitive damages of any kind, such as loss of production, loss of profit, costs of withdrawal from the market or costs of recall, costs of dismantling and reinstallation of goods, loss of contracts, etc.

XV - SPARE PARTS AND ACCESSORIES
Spare parts and accessories are provided on request insofar as they are available. Related costs (carriage and any other costs) are always added to the invoice.

We reserve the right to demand a minimum quantity or invoice a minimum per order.

XVI - PARTIAL INVALIDITY
If any provision of these General Conditions of Sale is held to be unenforceable for any reason, it shall be adjusted rather than voided, if possible, in order to achieve the intent of the parties to the extent possible. In any event, all other provisions shall be deemed valid and enforceable to the full extent possible.

XVII -DISPUTES
THESE GENERAL CONDITIONS OF SALE ARE GOVERNED BY FRENCH LAW.

ANY DISPUTE RELATING TO OUR SALES, EVEN IN THE CASE OF MULTIPLE DEFENDANTS, SHALL BE, IN THE ABSENCE OF AMICABLE SETTLEMENT AND NOTWITHSTANDING ANY CLAUSE TO THE CONTRARY, SUBJECT TO THE JURISDICTION OF THE COURTS OF ANGOULEME (France).

LEROY SOMER®

WORLD LEADER IN INDUSTRIAL DRIVE SYSTEMS

ELECTRIC MOTORS - GEARBOXES - ELECTRONICS
ALTERNATORS - ASYNCHRONOUS GENERATORS - DC MACHINES

37 PRODUCTION UNITS
470 SALES & SERVICE CENTRES WORLDWIDE

MOTEURS LEROY-SOMER - Boulevard Marcellin Leroy - 16015 ANGOULEME Cedex - FRANCE
Tél. (33) 05 45 64 45 64 - Fax (33) 05 45 64 45 04
www.leroy-somer.com

3210 en - 1.31/g - 3.00

LEROY-SOMER 16015 ANGOULÊME CEDEX - FRANCE

RCS ANGOULÊME N° B 671 820 223
S.A. au capital de 62 779 000 €

www.leroy-somer.com